YAMAHA

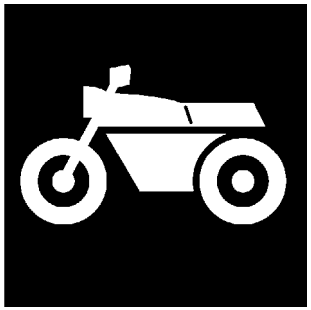

PARTS CATALOGUE

YZFR1X (4C8B) U49
YZFR1XC (4C8C) CALIFORNIA
YZFR1X (4C8D) CANADA

1G4C8-100E1

(2G4C8-100E1)

YAMAHA GENUINE Parts & Accessories

2007-10-30

NEWS No.	DATE	COMMENT
PE0-MC-070072	Oct.,26,2007	FIG.30: FRONT WHEEL/FIG.32: REAR WHEEL LIST CORRECTION

A2

YZFR1X/YZFR1XC
PARTS CATALOGUE
©2007 by Yamaha Motor Co., Ltd.
1st edition, July 2007
All rights reserved.
Any reprinting or unauthorized use
without the written permission of
Yamaha Motor Co., Ltd.
is expressly prohibited.

A3

FOREWORD

This Parts Catalogue is related to the parts for the model(s) on the cover page. When you are ordering replacement parts, please refer to this Parts Catalogue and quote both part numbers and part names correctly.

1. Modifications or additions which have been made after the issue of the Parts Catalogue will be announced in the Parts News.
   It is advisable that you make the necessary corrections to the Parts Catalogue according to the Parts News.

2. Abbreviations
   The following abbreviations are used in this Parts Catalogue.

   “UR” Use specified parts number.
   “UN” Use as many as needed.
   “AP” Alternate Parts
   “LM” Locally Made (Parts need to be ordered locally)
   “F#” Frame No. (Applicable machine No.)
   “O/S” Over Size

3. The number of components for assembly
   - Parts, which are to be supplied in an assembly, are listed with a dot (.) in front of the part name as shown below.
   - The numeral appearing to the right of each component part indicates the quantity of parts for each assembly unit.

PART NO.	DESCRIPTION	Q’TY	REMARKS
2F5–83310–60	FRONT FLASHER LIGHT ASSY	2	
115–83311–60	.BULB (6V–18W)	1	

4. Applicable colours of graphics are represented in the “REMARKS” as shown below.

PART NO.	DESCRIPTION	Q’TY	REMARKS
2N4–24110–00–X5	FUEL TANK COMP.	2	MXR
3J1–24240–10	.GRAPHIC, FUEL TANK	1	FOR MXR

5. Note that the illustrations for reference in finding parts numbers are not to be used for assembling. When assembling, please use the applicable service manual.

6. The asterisk (*) before a reference number indicates modified items after the first edition.

7. Applicable Serial No.

Engine Serial No.

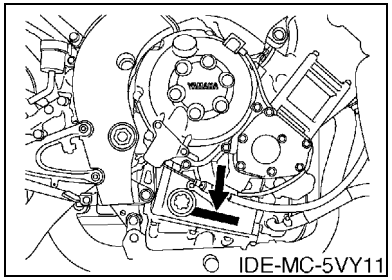

Frame Serial No.

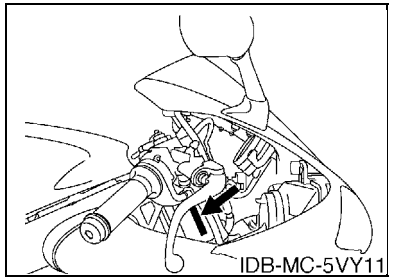

8. Applicable Colour Code (The (*) mark shows Model colour.)

Abbreviation	Colour Name	Colour Code
BWC1(*)	BLUISH WHITE COCKTAIL 1	0390
DNG1	DARK GRAYISH GOLD 1	1085
DPBMC(*)	DEEP PURPLISH BLUE METALLIC C	0564
DRMK(*)	DEEP RED METALLIC K	0918
LGB	LOW GLOSS BLACK	0098
MBL2	MAT BLACK 2	0582
MRM1	MAT RED METALLIC 1	1084
SMX(*)	BLACK METALLIC X	0903
VRC1	VIVID RED COCKTAIL 1	0121

MODEL LABEL

(1) A label called “Model Label” is affixed in the location as indicated in (3) below. When using this parts catalogue, please be sure to cross–reference the “model code – production code No.” in the catalogue with the “model code – production code No.” indicated on the Model Label affixed onto the product concerned.

(2) “Model Label” Indication

a b ○ xxxx – xxx ● x c	a: Model Type Code b: Production Code No. c: Colouring Type

○ 4TW1–010 ● A

(3) Model Label Affixing Location

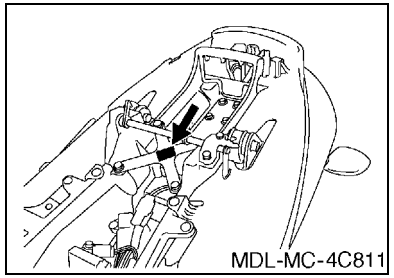

(4) Colouring Information

Model Code	Colouring Type Code	Colour Code	Colour Name	Abbreviation
4C8B	A	0564	DEEP PURPLISH BLUE METALLIC C	DPBMC
	B	0918	DEEP RED METALLIC K	DRMK
	C	0903	BLACK METALLIC X	SMX
4C8C	A	0564	DEEP PURPLISH BLUE METALLIC C	DPBMC
	B	0918	DEEP RED METALLIC K	DRMK
	C	0903	BLACK METALLIC X	SMX
4C8D	A	0564	DEEP PURPLISH BLUE METALLIC C	DPBMC
	B	0390	BLUISH WHITE COCKTAIL 1	BWC1
	C	0903	BLACK METALLIC X	SMX

(5) Model Code – Production Code Number of Model Listed in This Parts Catalogue

Model Code	Production Code No.	Country (destination)
4C8B	010	U49
4C8C	010	CALIFORNIA
4C8D	010	CANADA

Model Code	Production Code No.	Country (destination)

CONTENTS

ENGINE

CYLINDER HEAD B2
CYLINDER B4
CRANKSHAFT & PISTON B5
VALVE B6
CAMSHAFT & CHAIN B8
WATER PUMP B9
RADIATOR & HOSE B11
OIL PUMP B13
OIL CLEANER B14
INTAKE B15
INTAKE 2 ..... C3
AIR INDUCTION SYSTEM C5
EXHAUST C6
CRANKCASE C9
CRANKCASE COVER 1 ..... C10
STARTER C13
CLUTCH C14
TRANSMISSION D2
SHIFT CAM & FORK D4
SHIFT SHAFT D5

CHASSIS

FRAME D6
FENDER D9
SIDE COVER D12
REAR ARM D13
REAR SUSPENSION D15
STEERING E2
FRONT FORK E3
FUEL TANK E5
SEAT E9
FRONT WHEEL E10
FRONT BRAKE CALIPER E11
REAR WHEEL E12
REAR BRAKE CALIPER E14
STEERING HANDLE & CABLE E15
FRONT MASTER CYLINDER F2
STAND & FOOTREST F3
REAR MASTER CYLINDER F6
COWLING 1 ..... F7
COWLING 2 ..... F10
GENERATOR F14
STARTING MOTOR F15
FLASHER LIGHT G2
METER G3
HEADLIGHT G4
TAILLIGHT G5
HANDLE SWITCH & LEVER G6
ELECTRICAL 1 ..... G7
ELECTRICAL 2 ..... G9

INDEX

NUMERICAL INDEX M1

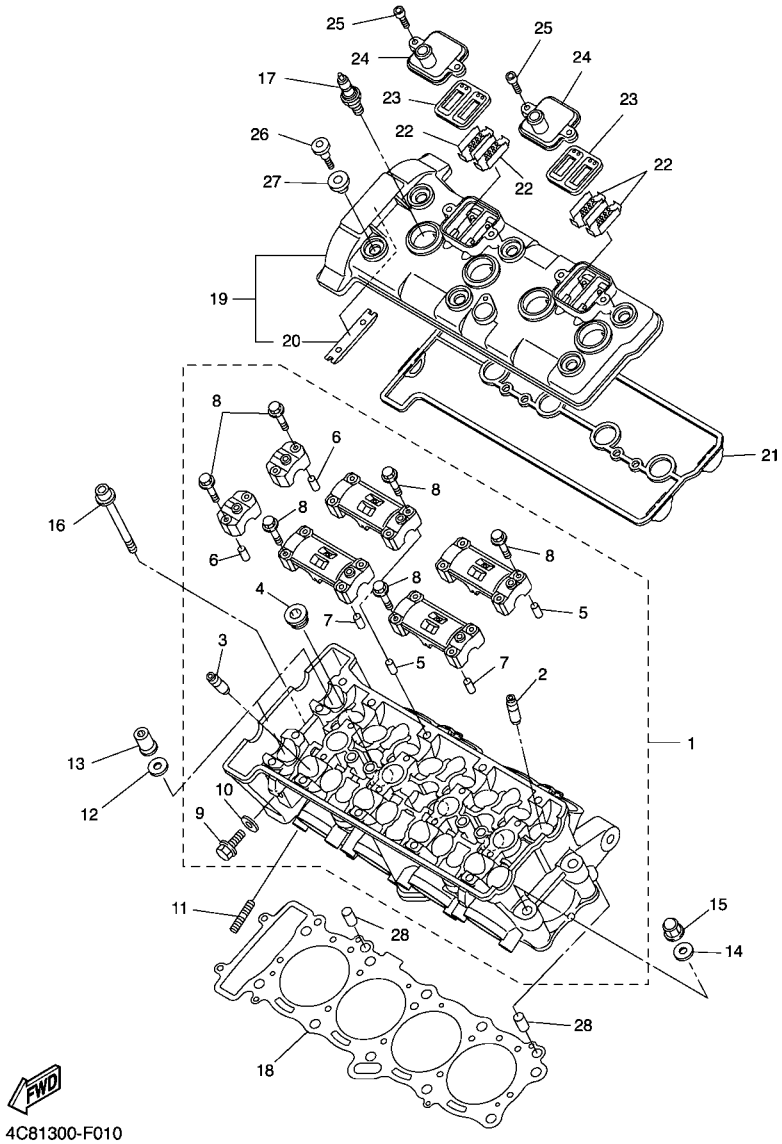

4C81300-F010

FIG. 1 CYLINDER HEAD

REF. NO.	PART NO.	DESCRIPTION	4C8B	4C8C	4C8D			REMARKS
1	4C8–11101–00	CYLINDER HEAD ASSY	1	1	1			
2	4C8–11133–10	.GUIDE, VALVE 1	8	8	8			
3	4C8–11134–10	.GUIDE, VALVE 2	8	8	8			
4	90340–18002	.PLUG, STRAIGHT SCREW	3	3	3			
5	91808–16023	.PIN, DOWEL	2	2	2			
6	91808–16023	.PIN, DOWEL	2	2	2			
7	91808–16023	.PIN, DOWEL	2	2	2			
8	90105–06027	.BOLT, FLANGE	20	20	20			
9	95024–06012	.BOLT, FLANGE	1	1	1			
10	90430–06014	.GASKET	1	1	1			
11	95612–08625	BOLT, STUD	8	8	8			
12	90201–10050	WASHER, PLATE	8	8	8			
13	90179–10414	NUT	8	8	8			
14	90201–10050	WASHER, PLATE	2	2	2			
15	90176–10075	NUT, CROWN	2	2	2			
16	90110–06212	BOLT, HEXAGON SOCKET HEAD	2	2	2			
17	94701–00403	PLUG, SPARK (NGK CR9EK)	4	4	4			
18	4C8–11181–00	GASKET, CYLINDER HEAD 1	1	1	1			
19	4C8–11191–00	COVER, CYLINDER HEAD 1	1	1	1			
20	5BE–12241–00	.GUIDE, STOPPER 2	1	1	1			
21	4C8–11193–00	GASKET, HEAD COVER 1	1	1	1			
22	5VY–1482K–00	PLATE	4	4	4			
23	5SL–14890–10	REED VALVE ASSY	2	2	2			
24	5VY–14899–00	CAP, CASE	2	2	2			
25	90110–06175	BOLT, HEXAGON SOCKET HEAD	4	4	4			
26	90109–066F0	BOLT	6	6	6			
27	5VY–1111G–00	RUBBER, MOUNT 1	6	6	6			

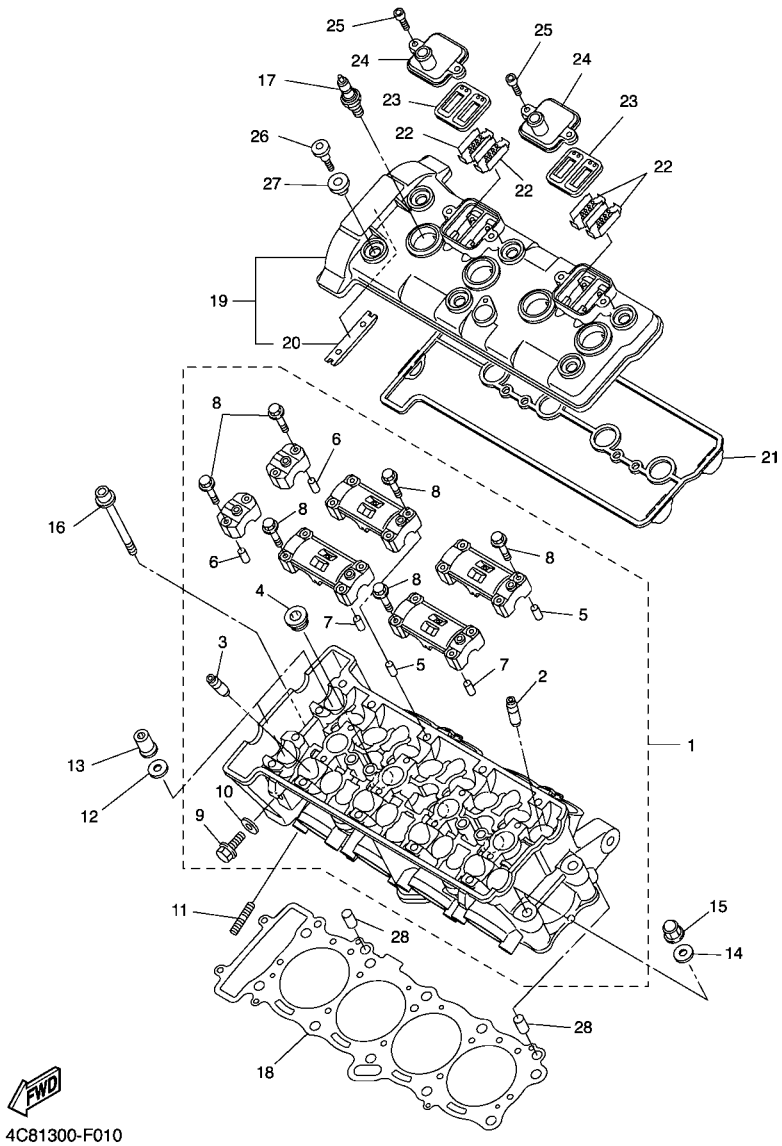

FIG. 1 CYLINDER HEAD

REF. NO.	PART NO.	DESCRIPTION	4C8B	4C8C	4C8D			REMARKS
28	99530–10114	PIN, DOWEL	2	2	2			

FIG. 2 CYLINDER

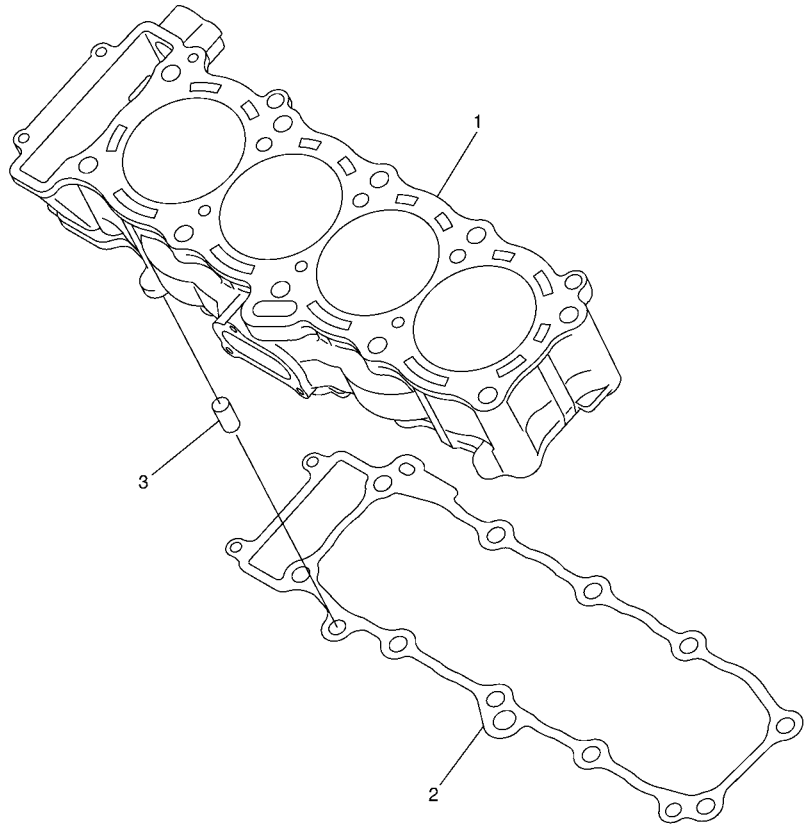

5VY1300-C020

REF. NO.	PART NO.	DESCRIPTION	4C8B	4C8C	4C8D			REMARKS
1	5VY–11311–10	CYLINDER 1	1	1	1			
2	5VY–11351–00	GASKET, CYLINDER	1	1	1			
3	99530–10114	PIN, DOWEL	2	2	2			

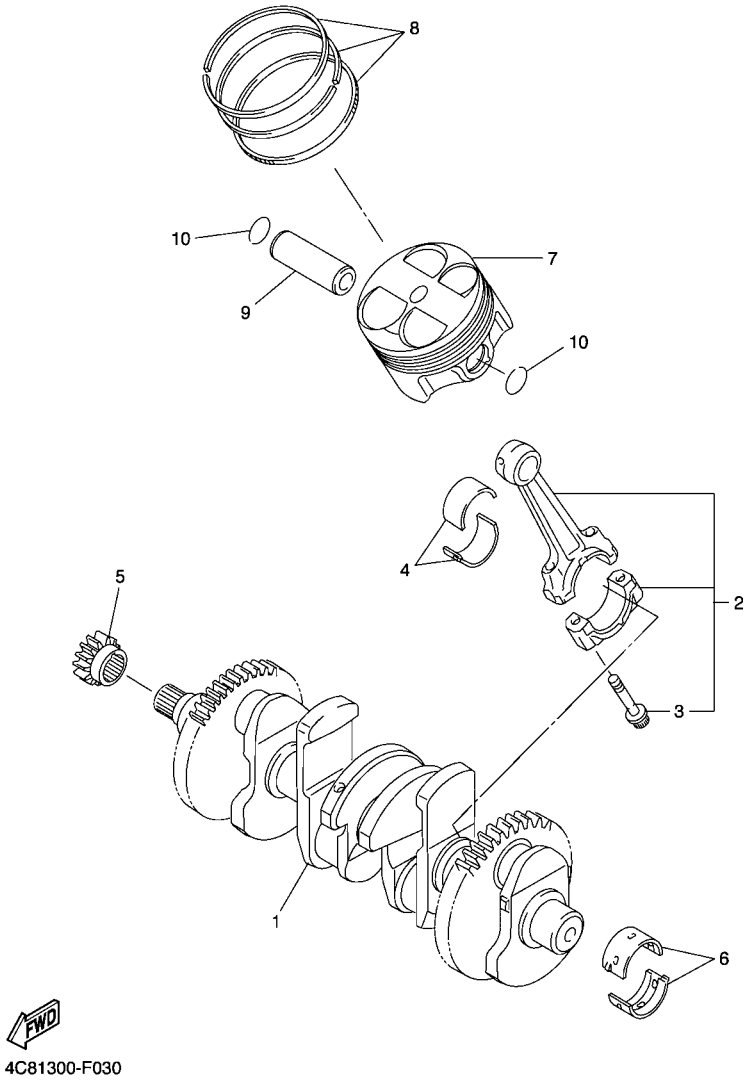

FIG. 3 CRANKSHAFT & PISTON

REF. NO.	PART NO.	DESCRIPTION	4C8B	4C8C	4C8D			REMARKS
1	4C8–11411–00	CRANKSHAFT	1	1	1			
2	4C8–11650–00	CONNECTING ROD ASSY	4	4	4			
3	5VY–11654–01	.BOLT, CONNECTING ROD	2	2	2			
4	4C8–11656–00	PLANE BEARING, CONNECTING ROD	8	8	8			UR RED-BLUE
	4C8–11656–10	PLANE BEARING, CONNECTING ROD	8	8	8			UR RED-BLACK
	4C8–11656–20	PLANE BEARING, CONNECTING ROD	8	8	8			UR RED-BROWN
	4C8–11656–30	PLANE BEARING, CONNECTING ROD	8	8	8			UR RED-GREEN
5	5VY–11549–00	SPROCKET, CAM CHAIN	1	1	1			
6	5VY–11416–A0	PLANE BEARING, CRANKSHAFT 1	10	10	10			UR WHITE
	5VY–11416–00	PLANE BEARING, CRANKSHAFT 1	10	10	10			UR BLUE
	5VY–11416–10	PLANE BEARING, CRANKSHAFT 1	10	10	10			UR BLACK
	5VY–11416–20	PLANE BEARING, CRANKSHAFT 1	10	10	10			UR BROWN
	5VY–11416–30	PLANE BEARING, CRANKSHAFT 1	10	10	10			UR GREEN
7	4C8–11631–00	PISTON (STD)	4	4	4			
8	4C8–11603–00	PISTON RING SET (STD)	4	4	4			
9	4C8–11633–00	PIN, PISTON	4	4	4			
10	93450–18157	CIRCLIP	8	8	8			

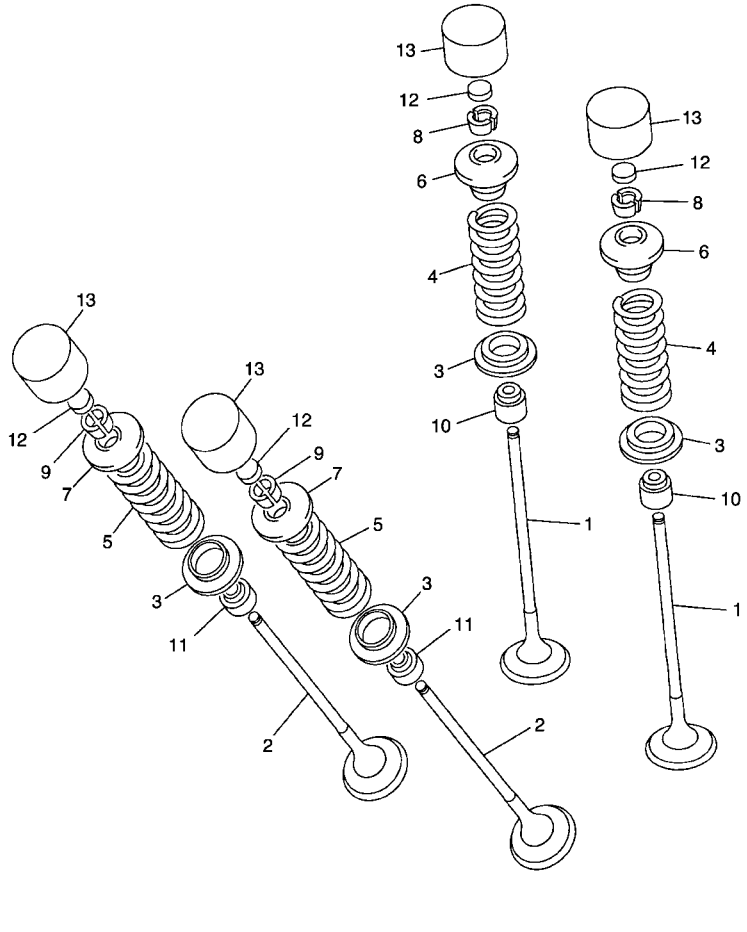

4C81300-F040

FIG. 4 VALVE

REF. NO.	PART NO.	DESCRIPTION	4C8B	4C8C	4C8D			REMARKS
1	4C8–12111–00	VALVE, INTAKE	8	8	8			
2	4C8–12121–00	VALVE, EXHAUST	8	8	8			
3	4C8–12116–00	SEAT, VALVE SPRING	16	16	16			
4	4C8–12113–00	SPRING, VALVE INNER	8	8	8			
5	4C8–12114–00	SPRING, VALVE OUTER	8	8	8			
6	4C8–12117–00	RETAINER, VALVE SPRING	8	8	8			
7	4C8–12127–00	RETAINER, VALVE SPRING	8	8	8			
8	1AA–12118–00	COTTER, VALVE	16	16	16			
9	1WG–12118–00	COTTER, VALVE	16	16	16			
10	3P6–12129–00	SEAL, VALVE STEM	8	8	8			
11	4SV–12119–00	SEAL, VALVE STEM	8	8	8			
12	3LD–12168–K1	PAD, ADJUSTING (1.60)	16	16	16			UR
	3LD–12168–M1	PAD, ADJUSTING (1.65)	16	16	16			UR
	3LD–12168–R1	PAD, ADJUSTING (1.70)	16	16	16			UR
	3LD–12168–U1	PAD, ADJUSTING (1.75)	16	16	16			UR
	3LD–12168–W1	PAD, ADJUSTING (1.80)	16	16	16			UR
	3LD–12168–Y1	PAD, ADJUSTING (1.85)	16	16	16			UR
	3LD–12169–11	PAD, ADJUSTING (1.90)	16	16	16			UR
	3LD–12169–31	PAD, ADJUSTING (1.95)	16	16	16			UR
	3LD–12169–50	PAD, ADJUSTING (2.00)	16	16	16			UR
	3LD–12169–70	PAD, ADJUSTING (2.05)	16	16	16			UR
	3LD–12169–90	PAD, ADJUSTING (2.10)	16	16	16			UR
	3LD–12169–E0	PAD, ADJUSTING (2.15)	16	16	16			UR
	3LD–12169–G0	PAD, ADJUSTING (2.20)	16	16	16			UR
	3LD–12169–J0	PAD, ADJUSTING (2.25)	16	16	16			UR
	3LD–12169–L0	PAD, ADJUSTING (2.30)	16	16	16			UR
	3LD–12169–N0	PAD, ADJUSTING (2.35)	16	16	16			UR

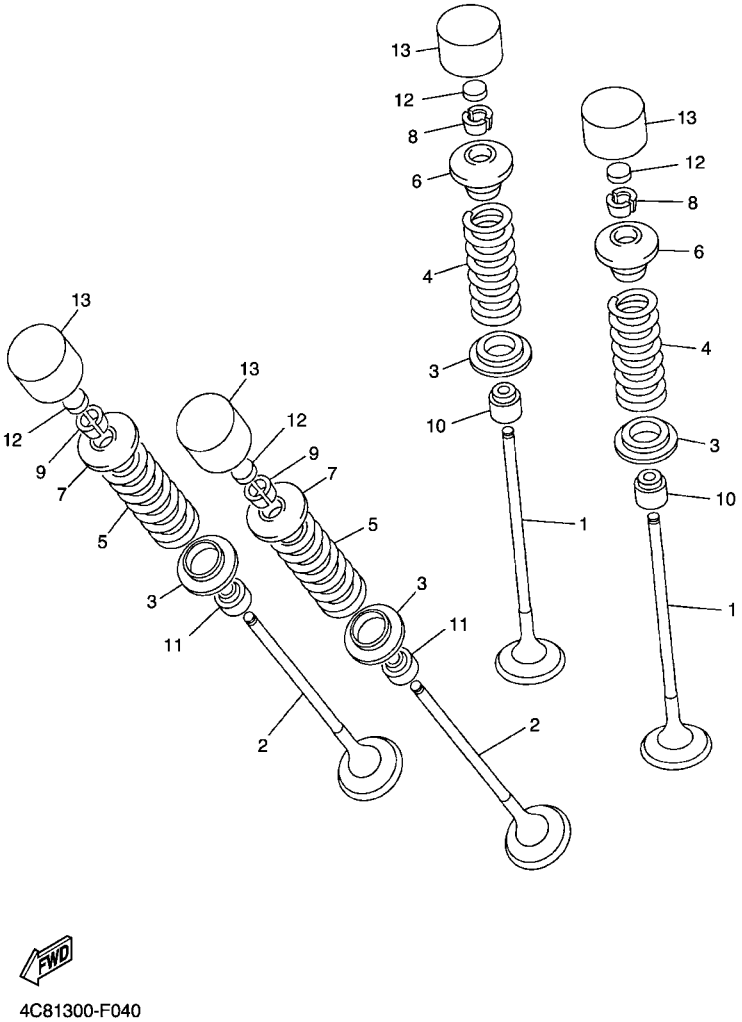

4C81300-F040

FIG. 4 VALVE

REF. NO.	PART NO.	DESCRIPTION	4C8B	4C8C	4C8D			REMARKS
12	3LD–12169–T0	PAD, ADJUSTING (2.40)	16	16	16			UR
13	4C8–12153–20	LIFTER, VALVE	16	16	16			UR BLUE
	4C8–12153–30	LIFTER, VALVE	16	16	16			UR RED
	4C8–12153–09	LIFTER, VALVE (O/S)	16	16	16			AP GREEN

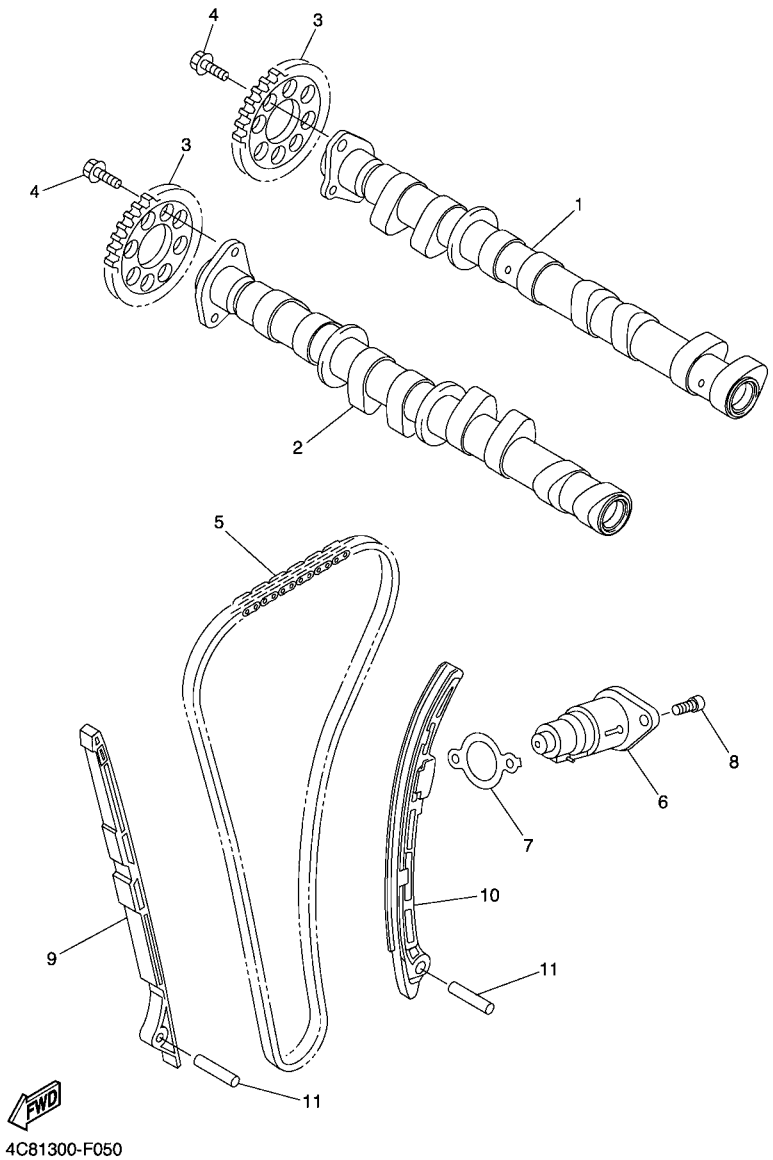

FIG. 5 CAMSHAFT & CHAIN

REF. NO.	PART NO.	DESCRIPTION	4C8B	4C8C	4C8D			REMARKS
1	4C8–12170–00	CAMSHAFT ASSY 1	1	1	1			
2	4C8–12180–00	CAMSHAFT ASSY 2	1	1	1			
3	4C8–12176–00	SPROCKET, CAM CHAIN	2	2	2			
4	90105–07006	BOLT, FLANGE	4	4	4			
5	94591–60124	CHAIN	1	1	1			
6	4C8–12210–00	TENSIONER ASSY, CAM CHAIN	1	1	1			
7	2D1–12213–00	GASKET, TENSIONER CASE	1	1	1			
8	90110–06106	BOLT, HEXAGON SOCKET HEAD	2	2	2			
9	4C8–12251–00	DAMPER, CHAIN 1	1	1	1			
10	4C8–12252–00	DAMPER, CHAIN 2	1	1	1			
11	93607–44002	PIN, DOWEL	2	2	2			

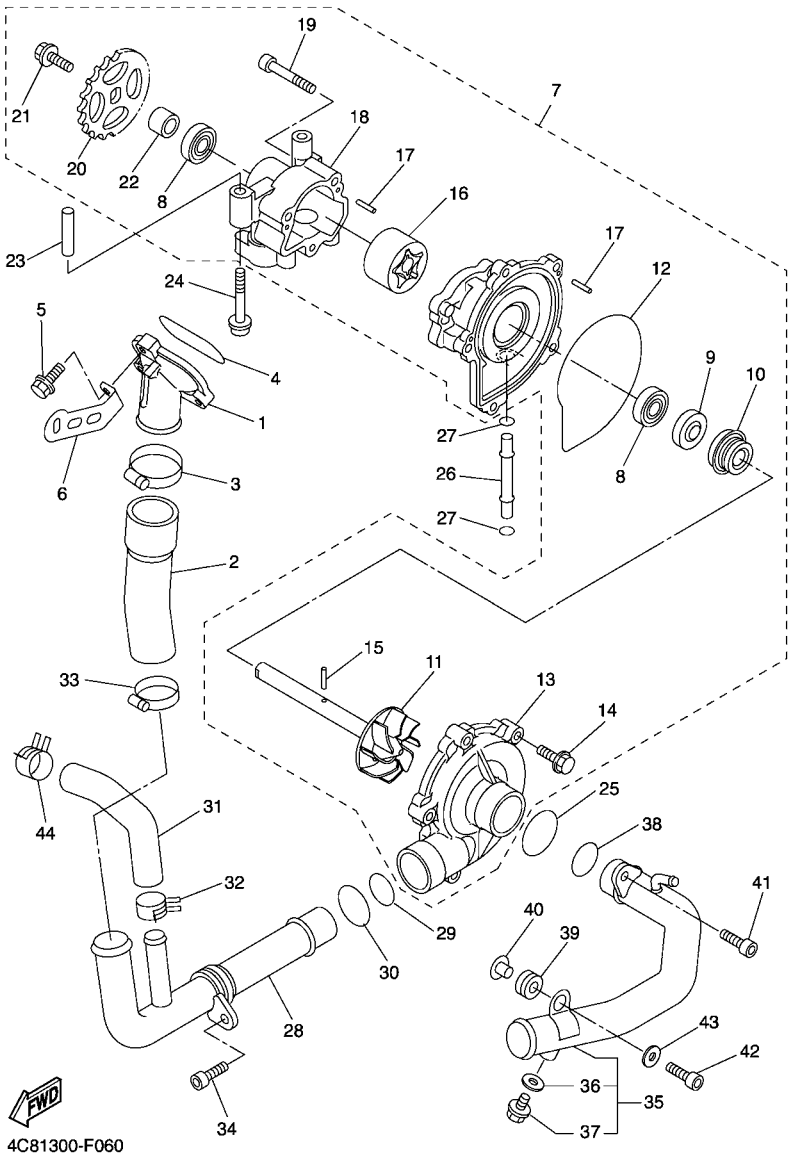

FIG. 6 WATER PUMP

REF. NO.	PART NO.	DESCRIPTION	4C8B	4C8C	4C8D			REMARKS
1	5VY–12469–00	JOINT 1	1	1	1			
2	5VY–12576–00	HOSE 1	1	1	1			
3	90450–38040	HOSE CLAMP ASSY	1	1	1			
4	93210–47675	O-RING	1	1	1			
5	95024–06025	BOLT, FLANGE	3	3	3			
6	5VY–12637–00	STAY 1	1	1	1			
7	4C8–12420–00	WATER PUMP ASSY	1	1	1			
8	93306–00106	.BEARING	2	2	2			
9	93102–12372	.OIL SEAL	1	1	1			
10	4C8–12438–00	.SEAL, MECHANICAL	1	1	1			
11	5VY–12450–10	.IMPELLER SHAFT ASSY	1	1	1			
12	4XV–12439–00	.O-RING	1	1	1			
13	5VY–12422–00	.COVER, HOUSING	1	1	1			
14	90105–06065	.BOLT, FLANGE	5	5	5			
15	93603–17070	.PIN, DOWEL	1	1	1			
16	5VY–13310–10	.ROTOR ASSY 1	1	1	1			
17	93603–12007	.PIN, DOWEL	4	4	4			
18	5VY–13336–00	.HOUSING, ROTOR	1	1	1			
19	91312–06040	.BOLT	3	3	3			
20	5VY–13355–00	.SPROCKET, DRIVEN	1	1	1			
21	90105–06066	.BOLT, FLANGE	1	1	1			
22	5VY–12456–10	.WASHER	1	1	1			
23	91808–30031	PIN, DOWEL	1	1	1			
24	90110–06167	BOLT, HEXAGON SOCKET HEAD	2	2	2			
25	93210–357A2	O-RING	1	1	1			
26	4XV–12485–00	PIPE 5	1	1	1			
27	93210–06667	O-RING	2	2	2			

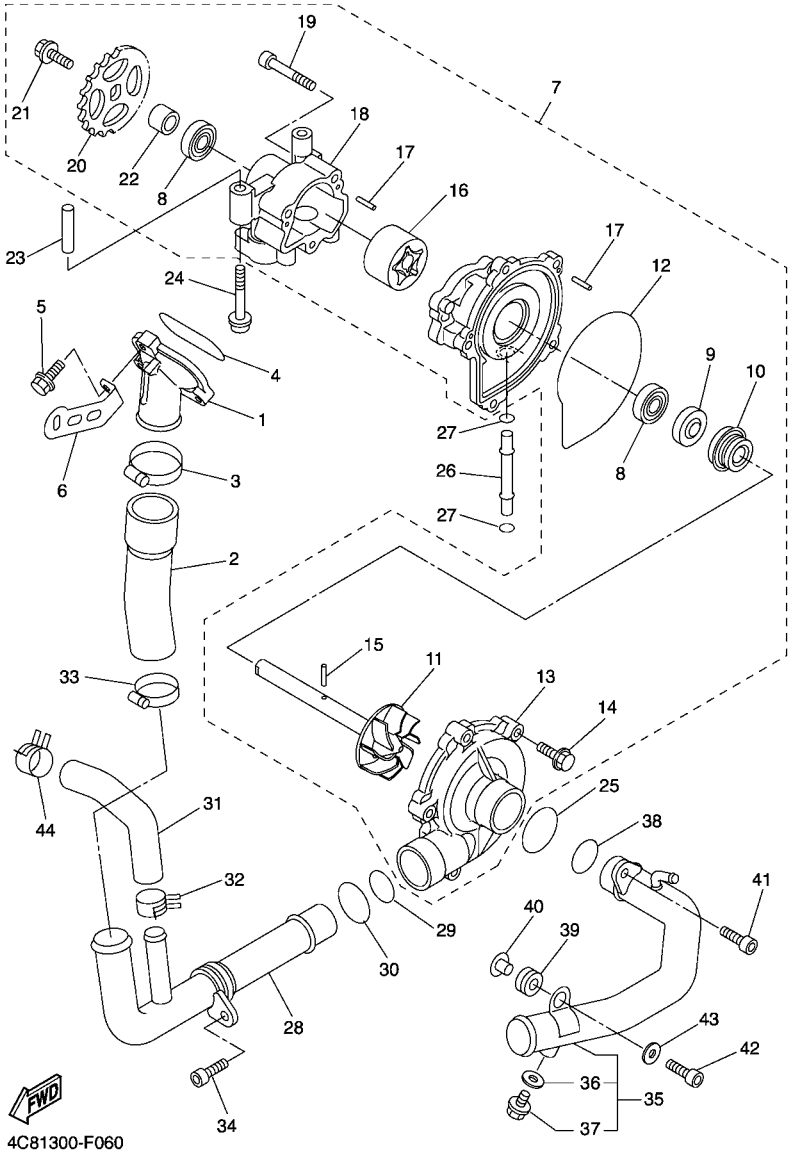

FIG. 6 WATER PUMP

REF. NO.	PART NO.	DESCRIPTION	4C8B	4C8C	4C8D			REMARKS
28	5VY–12481–10	PIPE 1	1	1	1			
29	93210–235A1	O-RING	1	1	1			
30	93210–27370	O-RING	1	1	1			
31	5VY–12588–00	HOSE 5	1	1	1			
32	90467–200A0	CLIP	1	1	1			
33	90450–32001	HOSE CLAMP ASSY	1	1	1			
34	90110–06161	BOLT, HEXAGON SOCKET HEAD	1	1	1			
35	4C8–12484–00	PIPE 4	1	1	1			
36	90430–06014	.GASKET	1	1	1			
37	90153–06002	.SCREW, HEXAGON	1	1	1			
38	93210–235A1	O-RING	1	1	1			
39	90480–12010	GROMMET	1	1	1			
40	90387–06112	COLLAR	1	1	1			
41	90110–06161	BOLT, HEXAGON SOCKET HEAD	1	1	1			
42	90110–06174	BOLT, HEXAGON SOCKET HEAD	1	1	1			
43	90201–06079	WASHER, PLATE	1	1	1			
44	90467–200A0	CLIP	1	1	1			

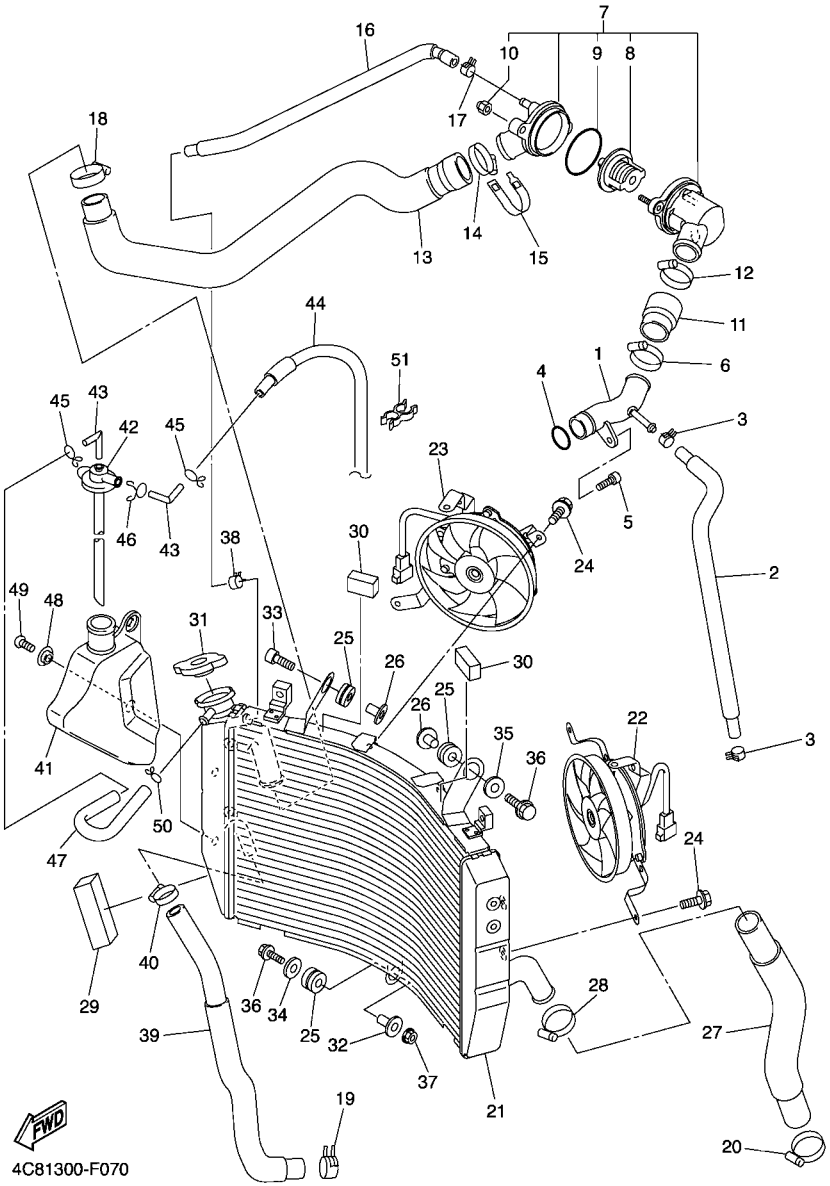

FIG. 7 RADIATOR & HOSE

REF. NO.	PART NO.	DESCRIPTION	4C8B	4C8C	4C8D			REMARKS
1	4C8–12485–00	PIPE 5	1	1	1			
2	4C8–1243A–00	HOSE 1	1	1	1			
3	90467–11090	CLIP	2	2	2			
4	93210–235A1	O-RING	1	1	1			
5	90110–06168	BOLT, HEXAGON SOCKET HEAD	1	1	1			
6	90450–35001	HOSE CLAMP ASSY	1	1	1			
7	5VY–12410–10	THERMOSTAT ASSY	1	1	1			
8	5LP–12411–00	.THERMOSTAT	1	1	1			
9	93210–49046	.O-RING	1	1	1			
10	90176–06014	.NUT, CROWN	2	2	2			
11	4C8–12579–00	HOSE 4	1	1	1			
12	90450–38040	HOSE CLAMP ASSY	1	1	1			
13	4C8–12577–00	HOSE 2	1	1	1			
14	90450–38040	HOSE CLAMP ASSY	1	1	1			
15	5GV–1246A–00	COVER 1	1	1	1			
16	4C8–12552–00	HOSE 8	1	1	1			
17	90467–11044	CLIP	1	1	1			
18	90450–35001	HOSE CLAMP ASSY	1	1	1			
19	90467–200A0	CLIP	1	1	1			
20	90450–32001	HOSE CLAMP ASSY	1	1	1			
21	4C8–12461–00	RADIATOR ASSY	1	1	1			
22	4C8–12405–00	BLOWER ASSY	1	1	1			
23	4C8–12405–10	BLOWER ASSY	1	1	1			
24	5GJ–12675–00	BOLT, BLOWER HOLDING	6	6	6			
25	90480–15363	GROMMET	3	3	3			
26	90387–0700G	COLLAR	2	2	2			
27	4C8–12551–00	HOSE 7	1	1	1			

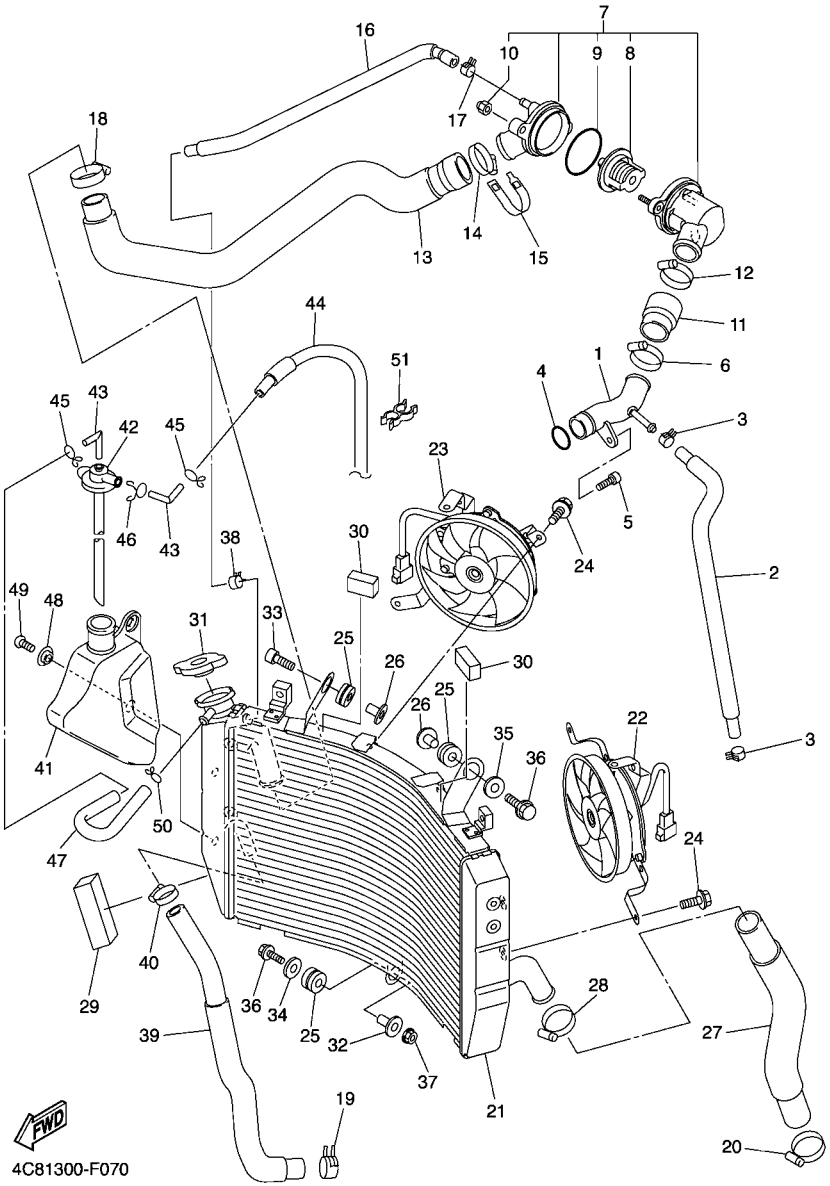

FIG. 7 RADIATOR & HOSE

REF. NO.	PART NO.	DESCRIPTION	4C8B	4C8C	4C8D			REMARKS
28	90450–35001	HOSE CLAMP ASSY	1	1	1			
29	4C8–12659–00	DAMPER, AIR SHROUD 2	1	1	1			
30	4C8–12668–00	DAMPER, AIR SHROUD 3	2	2	2			
31	5SL–12462–00	CAP, RADIATOR	1	1	1			
32	90387–0700G	COLLAR	1	1	1			
33	91317–06030	BOLT	1	1	1			
34	90201–06071	WASHER, PLATE	1	1	1			
35	90201–06074	WASHER, PLATE	1	1	1			
36	95827–06030	BOLT, FLANGE	2	2	2			
37	95607–06200	NUT, SELF U-FLANGE	1	1	1			
38	90467–11090	CLIP	1	1	1			
39	4C8–12589–00	HOSE 6	1	1	1			
40	90450–22017	HOSE CLAMP ASSY	1	1	1			
41	4C8–21871–00	TANK, RECOVERY	1	1	1			
42	2C0–21875–00	CAP	1	1	1			
43	26H–21828–00	ELBOW	2	2	2			
44	4C8–21816–00	PIPE 1	1	1	1			
45	90467–08003	CLIP	2	2	2			
46	90467–10M04	CLIP	1	1	1			
47	4C8–1243F–00	HOSE,3	1	1	1			
48	90387–06681	COLLAR	2	2	2			
49	92012–06014	BOLT, BUTTON HEAD	2	2	2			
50	90467–08075	CLIP	1	1	1			
51	90464–11M24	CLAMP	2	2	2			

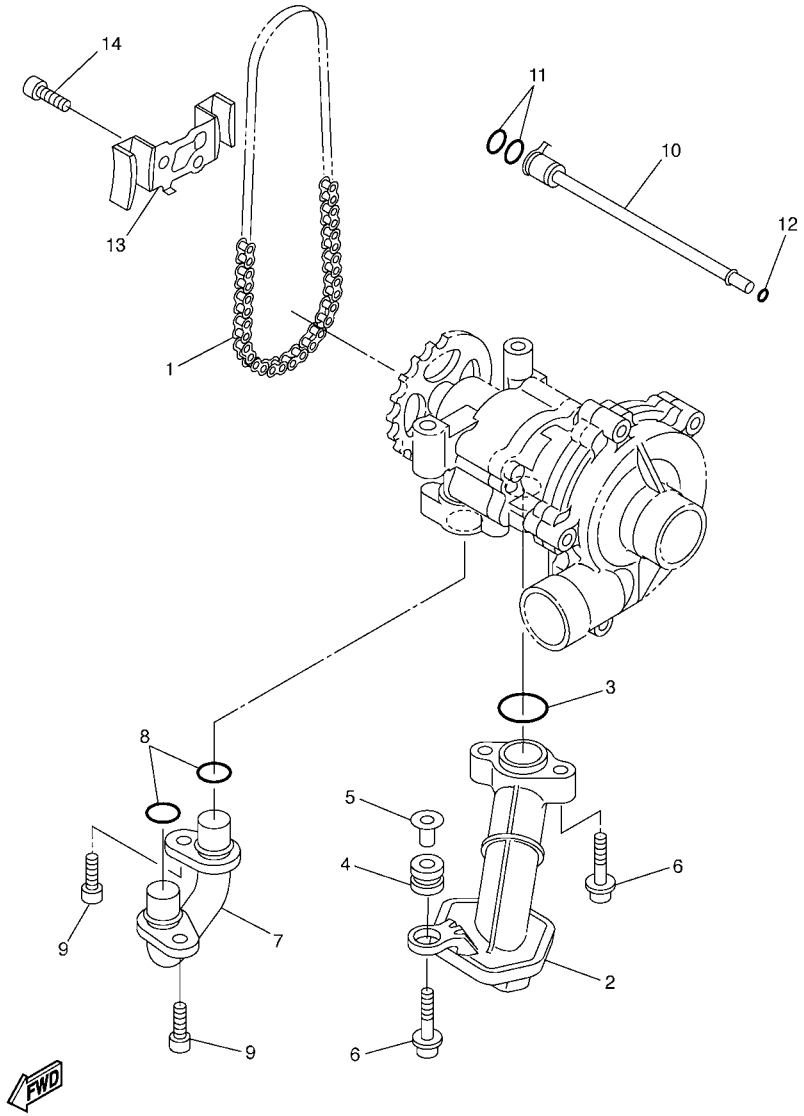

5VY1300-C080

FIG. 8 OIL PUMP

REF. NO.	PART NO.	DESCRIPTION	4C8B	4C8C	4C8D			REMARKS
1	94580–25078	CHAIN (DID25 78LE)	1	1	1			
2	4C8–13410–00	STRAINER HOUSING ASSY	1	1	1			
3	93210–22298	O-RING	1	1	1			
4	90480–13010	GROMMET	1	1	1			
5	5VY–13117–10	COLLAR, DISTANCE	1	1	1			
6	90110–06173	BOLT, HEXAGON SOCKET HEAD	3	3	3			
7	5VY–13416–00	PIPE, OIL 1	1	1	1			
8	93210–14003	O-RING	2	2	2			
9	90110–06161	BOLT, HEXAGON SOCKET HEAD	2	2	2			
10	5VY–1316E–00	PIPE, DELIVERY 5	1	1	1			
11	93210–09165	O-RING	2	2	2			
12	93210–06667	O-RING	1	1	1			
13	5VY–13898–00	HOLDER	1	1	1			
14	90110–06182	BOLT, HEXAGON SOCKET HEAD	2	2	2			

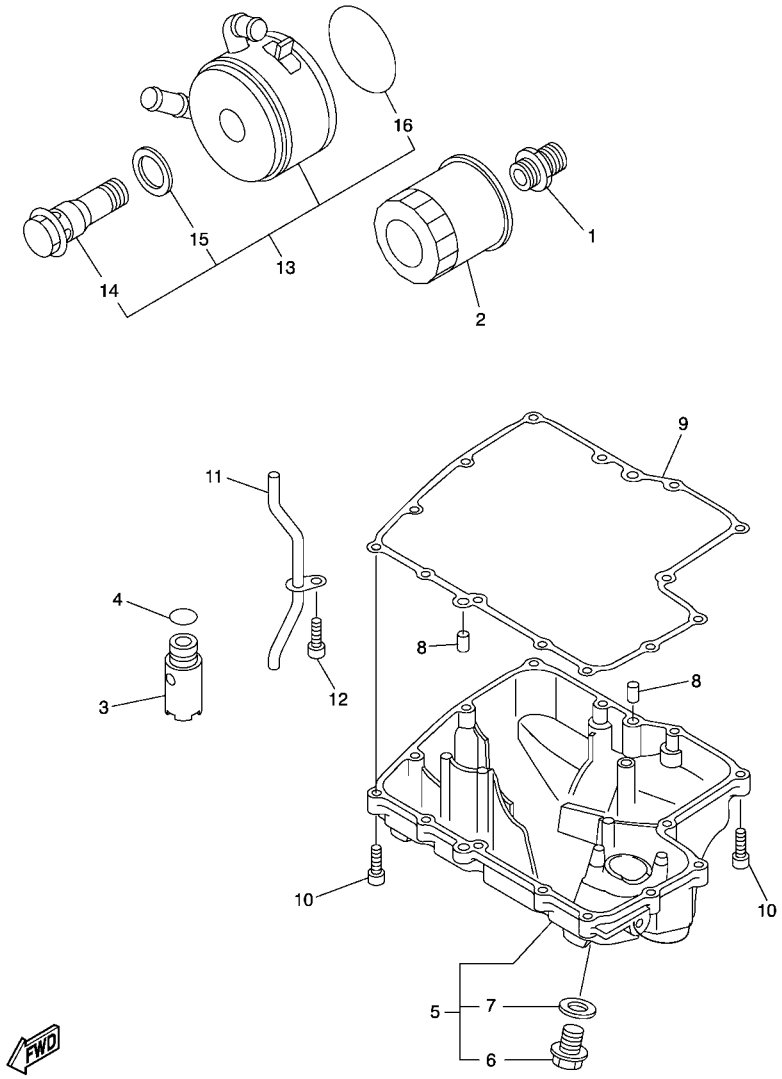

FIG. 9 OIL CLEANER

REF. NO.	PART NO.	DESCRIPTION	4C8B	4C8C	4C8D			REMARKS
1	90401–20145	BOLT, UNION	1	1	1			
2	5GH–13440–20	ELEMENT ASSY, OIL CLEANER	1	1	1			
3	5VY–13490–00	RELIEF VALVE ASSY	1	1	1			
4	93210–15566	O-RING	1	1	1			
5	4C8–13417–00	COVER, STRAINER	1	1	1			
6	90340–14132	.PLUG, STRAIGHT SCREW	1	1	1			
7	214–11198–01	.GASKET	1	1	1			
8	99530–08012	PIN, DOWEL	2	2	2			
9	4C8–13414–00	GASKET, STRAINER COVER	1	1	1			
10	91312–06025	BOLT	14	14	14			
11	5VY–13161–00	PIPE, DELIVERY 1	1	1	1			
12	90110–06182	BOLT, HEXAGON SOCKET HEAD	1	1	1			
13	5VY–13470–00	OIL COOLER ASSY	1	1	1			
14	5EB–12822–00	.BOLT, UNION	1	1	1			
15	5EB–13475–00	.GASKET	1	1	1			
16	5JW–13473–00	.O-RING	1	1	1			

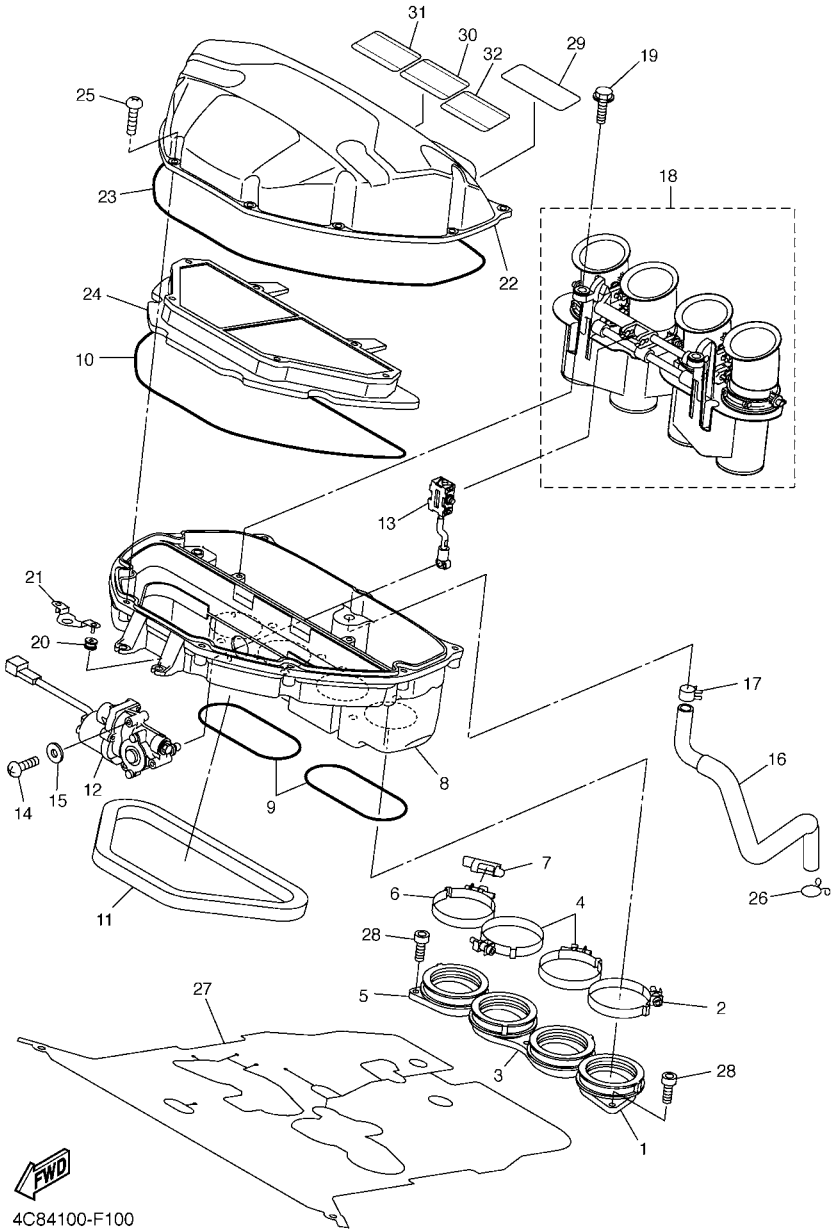

FIG. 10 INTAKE

REF. NO.	PART NO.	DESCRIPTION	4C8B	4C8C	4C8D			REMARKS
1	4C8–13595–00	JOINT	1	1	1			
2	90450–62002	HOSE CLAMP ASSY	1	1	1			
3	4C8–13596–00	JOINT, CARBURETOR 2	1	1	1			
4	90450–62002	HOSE CLAMP ASSY	2	2	2			
5	4C8–13598–00	JOINT, CARBURETOR 4	1	1	1			
6	90450–62002	HOSE CLAMP ASSY	1	1	1			
7	2C0–13881–00	COVER 1	1	1	1			
8	4C8–14411–00	CASE, AIR CLEANER 1	1	1	1			
9	4C8–14462–00	SEAL	2	2	2			
10	4C8–14457–00	SEAL	1	1	1			
11	4C8–14467–00	SEAL	1	1	1			
12	4C8–85850–00	GEARED MOTOR COMP.	1	1	1			
13	4C8–14490–00	SHAFT ASSY	1	1	1			
14	98502–05035	SCREW, PAN HEAD	3	3	3			
15	92902–05600	WASHER, PLATE	3	3	3			
16	4C8–15393–00	PIPE, BREATHER 2	1	1	1			
17	90467–140A5	CLIP	1	1	1			
18	4C8–1440B–00	JOINT ASSY	1	1	1			
19	90159–05035	SCREW, WITH WASHER	2	2	2			
20	90480–08264	GROMMET	2	2	2			
21	4C8–14498–00	STAY 1	1	1	1			
22	4C8–14421–00	CASE, AIR CLEANER 2	1	1	1			
23	4C8–14452–00	SEAL	1	1	1			
24	4C8–14451–00	ELEMENT, AIR CLEANER	1	1	1			
25	98902–05020	SCREW, BIND	9	9	9			
26	90467–14015	CLIP	1	1	1			
27	4C8–12682–00	PROTECTOR, HEAT	1	1	1			

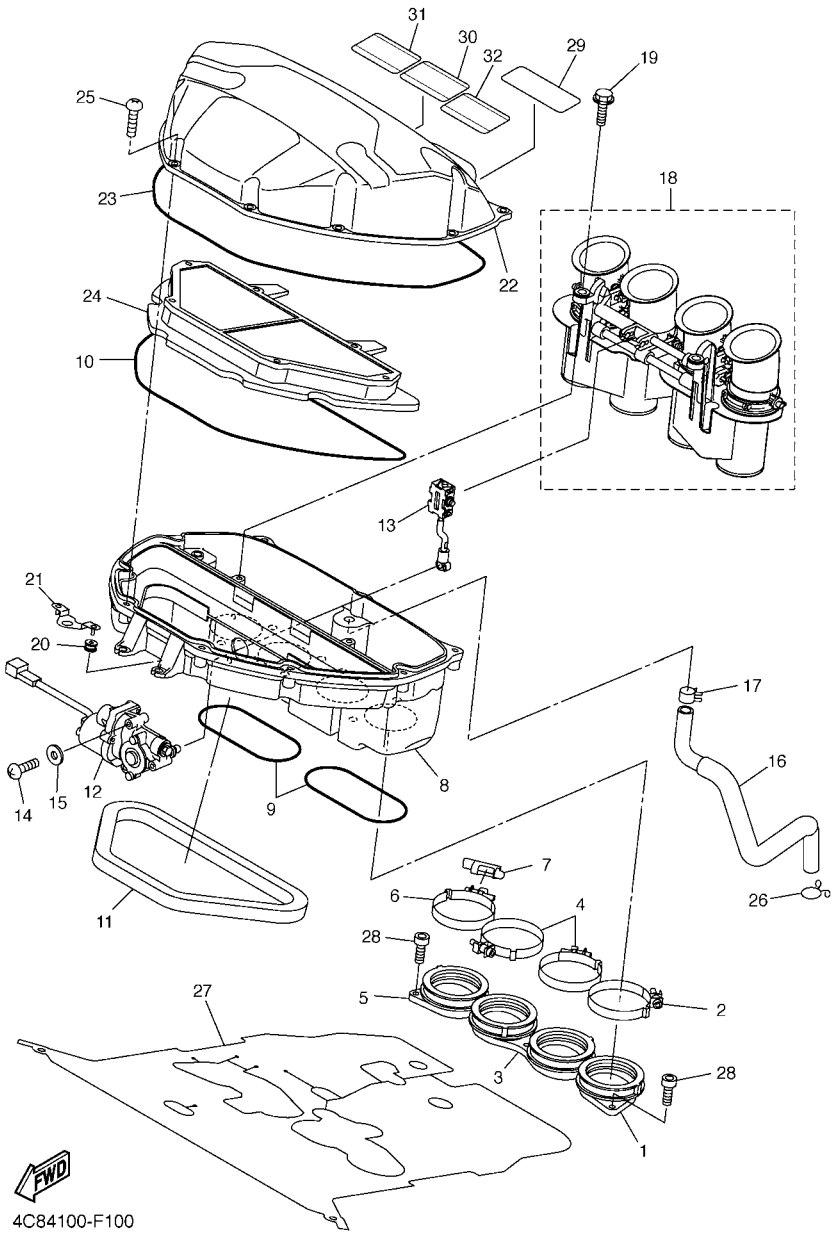

FIG. 10 INTAKE

REF. NO.	PART NO.	DESCRIPTION	4C8B	4C8C	4C8D			REMARKS
28	91312–06016	BOLT	7	7	7			
29	4C8–2179W–10	PLATE, EPA (NON CALIFORNIA)	1					
	4C8–2176P–10	PLATE, EPA (CALIFORNIA)		1				
30	5VX–21684–00	PLATE, ROUTING		1				
31	5PW–21686–01	PLATE, ROUTING 2		1				
32	2C0–2178A–00	LABEL		1				

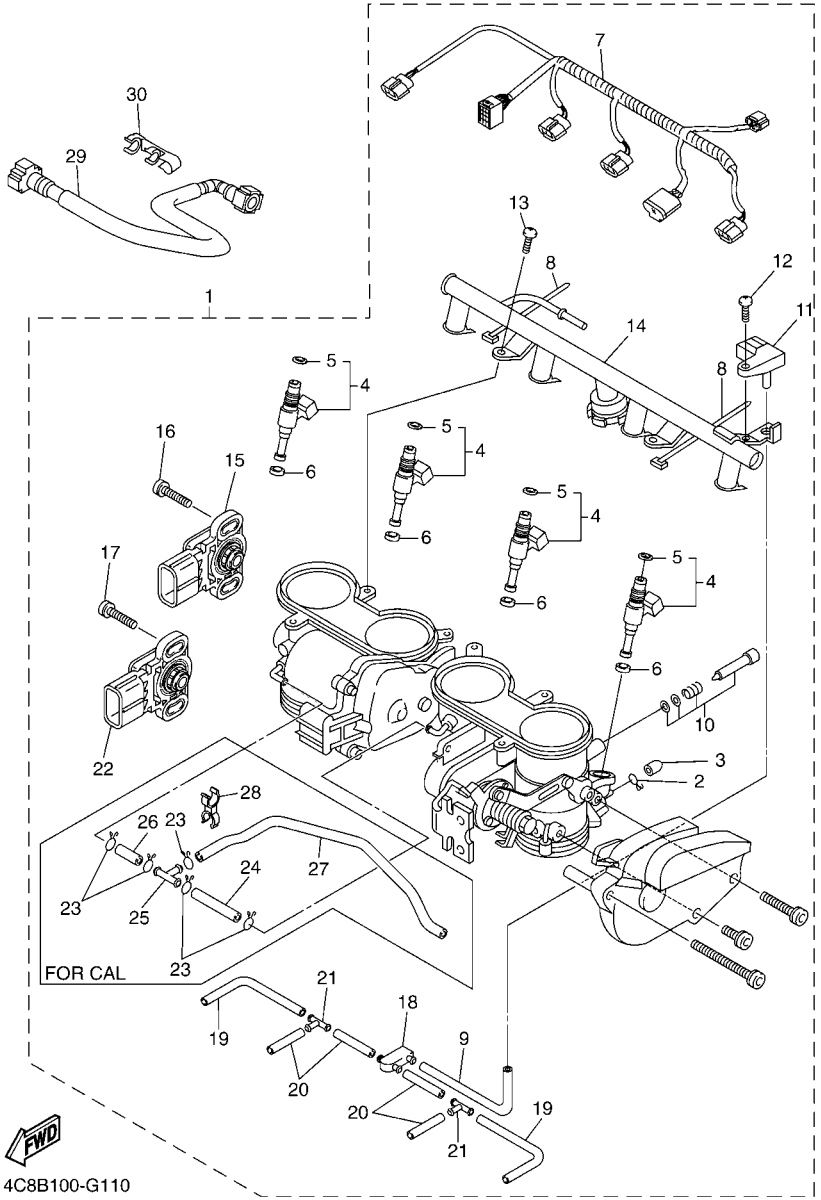

FIG. 11 INTAKE 2

REF. NO.	PART NO.	DESCRIPTION	4C8B	4C8C	4C8D			REMARKS
1	4C8–13750–20	THROTTLE BODY ASSY	1		1			
	4C8–13750–30	THROTTLE BODY ASSY		1				
2	8A7–14139–00	.CLIP, PIPE	4	4	4			
3	895–14169–00	.CAP	4	4	4			
4	4C8–13761–00	.INJECTOR	4	4	4			
5	5PS–14147–00	..O-RING	1	1	1			
6	8FP–13556–00	.GASKET, MANIFOLD	4	4	4			
7	4C8–82386–00	.EXTENSION, WIRE HARNESS	1	1	1			
8	4KM–14137–00	.CLIP	2	2	2			
9	5JW–14987–00	.HOSE	1	1	1			
10	2C0–14105–00	.PILOT SCREW SET	4	4	4			
11	2C0–82380–00	.SENSOR, PRESSURE	1	1	1			
12	2C0–14216–00	.SCREW	1	1	1			
13	98502–06012	.SCREW, PAN HEAD	2	2	2			
14	4C8–13930–00	.PIPE INLET ASSEMBLY	1	1	1			
15	13S–85885–00	.THROTTLE SENSOR ASSY	1	1	1			
16	8CC–14216–10	.SCREW	2	2	2			
17	5FL–14216–00	.SCREW	2	2	2			
18	3XV–14251–00	.NIPPLE	1	1	1			
19	5FL–14349–10	.PIPE	2	2	2			
20	5JW–14396–00	.PIPE	4	4	4			
21	68V–24376–00	.PIPE, JOINT 1	2	2	2			
22	13S–85884–00	.ACCELERATOR SENSOR ASSY	1	1	1			
23	90467–09006	.CLIP		5				
24	4C8–14465–10	.PIPE		1				
25	90413–08012	.WAY 3		1				
26	4C8–14466–10	.PIPE		1				

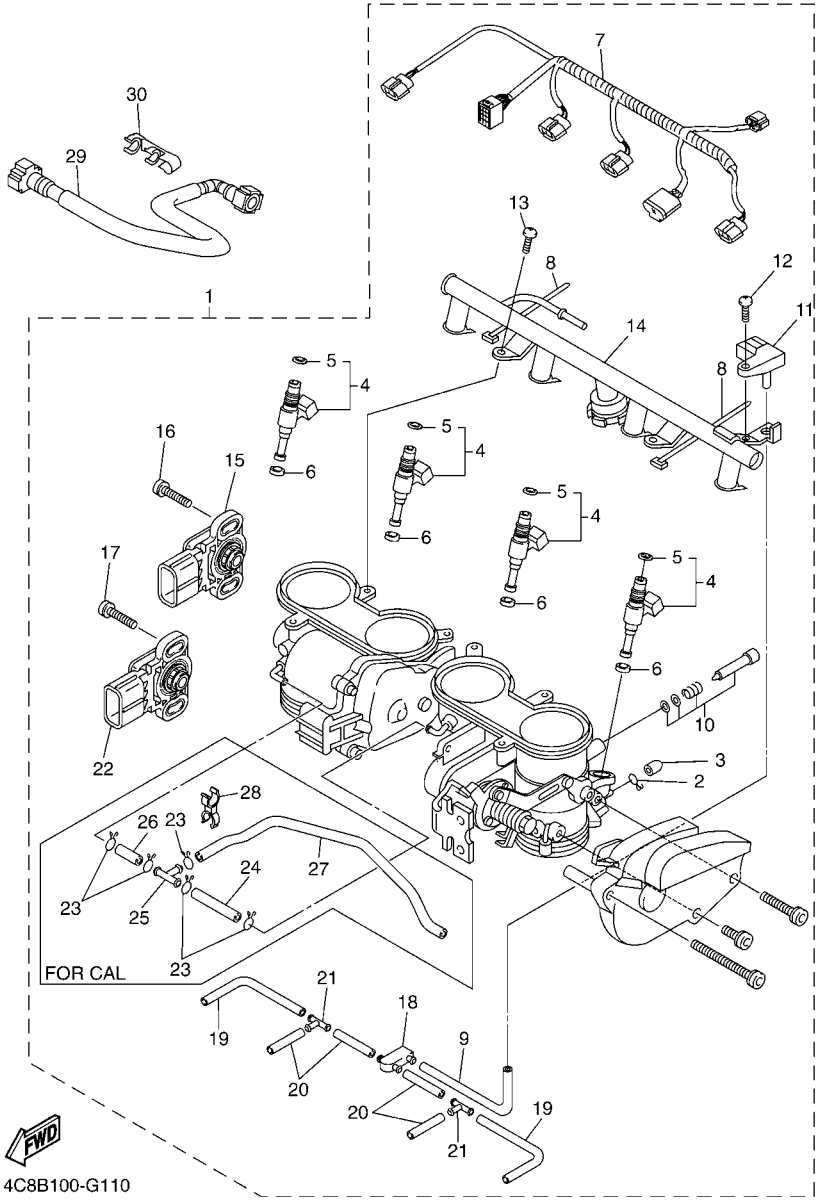

FIG. 11 INTAKE 2

REF. NO.	PART NO.	DESCRIPTION	4C8B	4C8C	4C8D			REMARKS
27	4C8–1443J–00	.PIPE		1				
28	90464–09012	.CLAMP		1				
29	4C8–13971–00	PIPE, FUEL 1	1	1	1			
30	90464–16005	CLAMP	1	1	1			

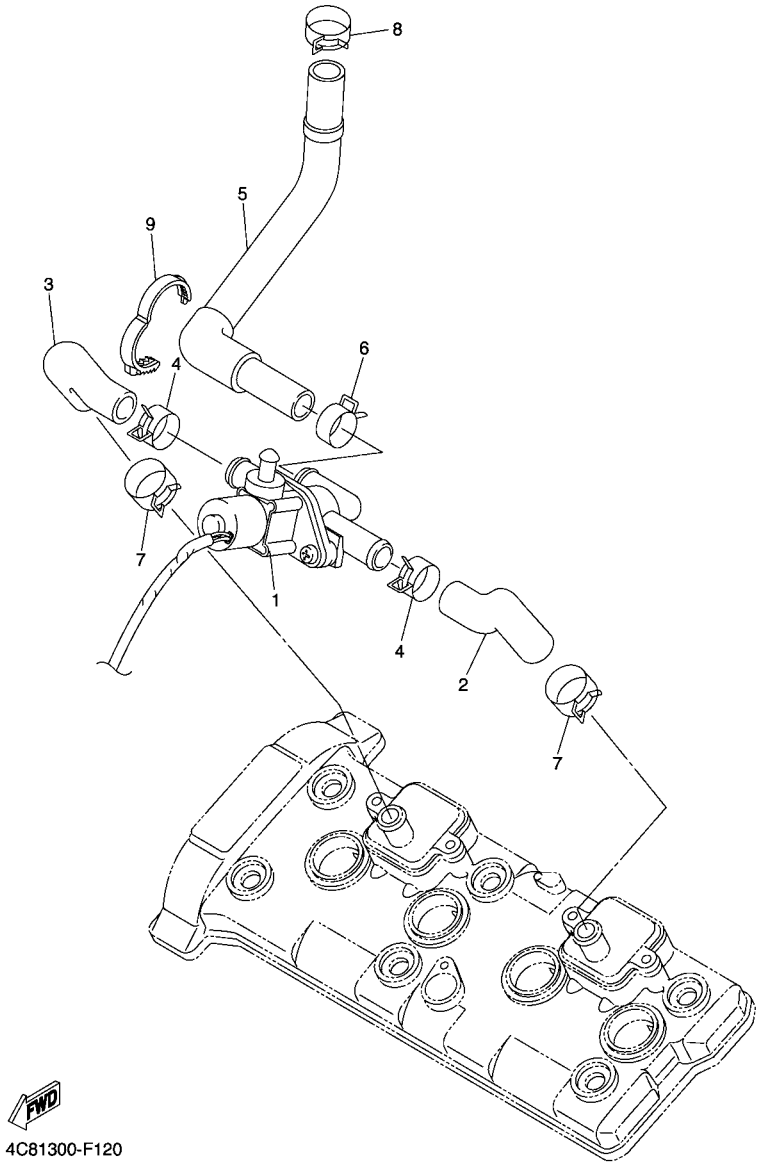

4C81300-F120

FIG. 12 AIR INDUCTION SYSTEM

REF. NO.	PART NO.	DESCRIPTION	4C8B	4C8C	4C8D			REMARKS
1	4C8–14840–00	AIR CUT VALVE ASSY	1	1	1			
2	4C8–14881–00	HOSE, BEND 1	1	1	1			
3	4C8–14882–00	HOSE, BEND 2	1	1	1			
4	90467–18172	CLIP	2	2	2			
5	4C8–14883–00	HOSE, BEND 3	1	1	1			
6	90467–18172	CLIP	1	1	1			
7	90467–180A0	CLIP	2	2	2			
8	90467–17128	CLIP	1	1	1			
9	90464–28003	CLAMP	1	1	1			

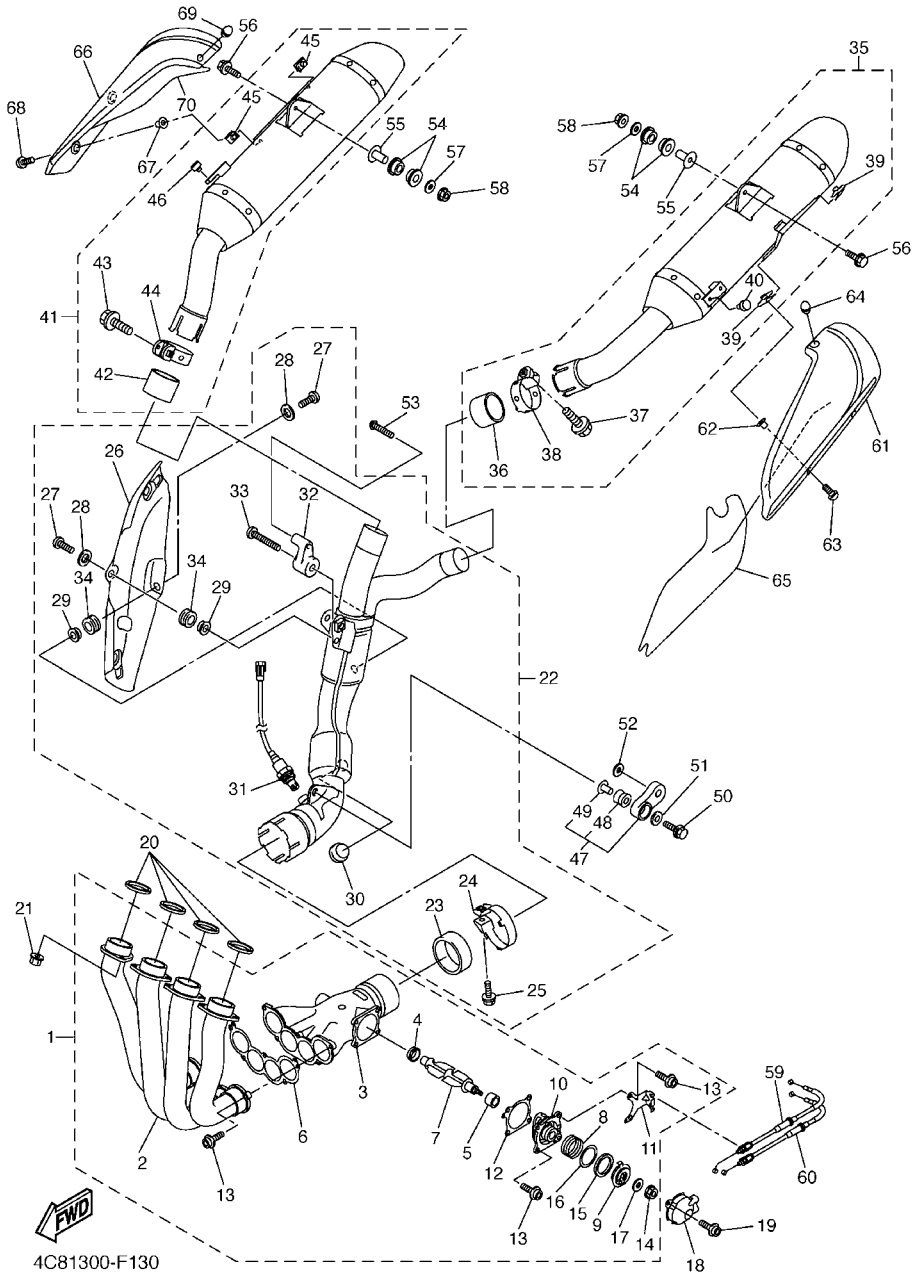

FIG. 13 EXHAUST

REF. NO.	PART NO.	DESCRIPTION	4C8B	4C8C	4C8D			REMARKS
1	4C8–14610–00	EXHAUST PIPE ASSY 1	1	1	1			
2	4C8–14602–00	.EXHAUST PIPE COMP.	1	1	1			
3	4C8–14615–00	.JOINT, EXHAUST 1	1	1	1			
4	5VY–14816–00	.PLUG, BLIND	1	1	1			
5	5VY–14638–00	.COLLAR	2	2	2			
6	5VY–14623–00	.GASKET, EXHAUST PIPE	1	1	1			
7	5VY–14821–00	.ARM, SHAFT (VALVE)	1	1	1			
8	5VY–14811–00	.HOUSING	1	1	1			
9	5VY–14865–10	.PULLEY	1	1	1			
10	5VY–14856–00	.SPRING	1	1	1			
11	5VY–14867–00	.BRACKET	1	1	1			
12	5VY–14643–00	.GASKET 3	1	1	1			
13	90110–06110	.BOLT, HEXAGON SOCKET HEAD	7	7	7			
14	90179–06M28	.NUT	1	1	1			
15	5VY–14648–00	.COLLAR 2	1	1	1			
16	5VY–14674–00	.VALVE, PLATE	1	1	1			
17	92990–06200	.WASHER, PLAIN	1	1	1			
18	5VY–14826–00	PROTECTOR, EXHAUST	1	1	1			
19	90110–06110	BOLT, HEXAGON SOCKET HEAD	2	2	2			
20	4FM–14613–00	GASKET, EXHAUST PIPE	4	4	4			
21	90179–08410	NUT	8	8	8			
22	4C8–14740–00	CATALYST ASSY.	1	1	1			
23	4C8–14755–00	.GASKET, SILENCER	1	1	1			
24	4C8–14715–00	.BAND, MUFFLER	1	1	1			
25	95814–08030	.BOLT, FLANGE	1	1	1			
26	4C8–14738–00	.PROTECTOR, MUFFLER 3	1	1	1			
27	92014–06012	.BOLT, BUTTON HEAD	4	4	4			

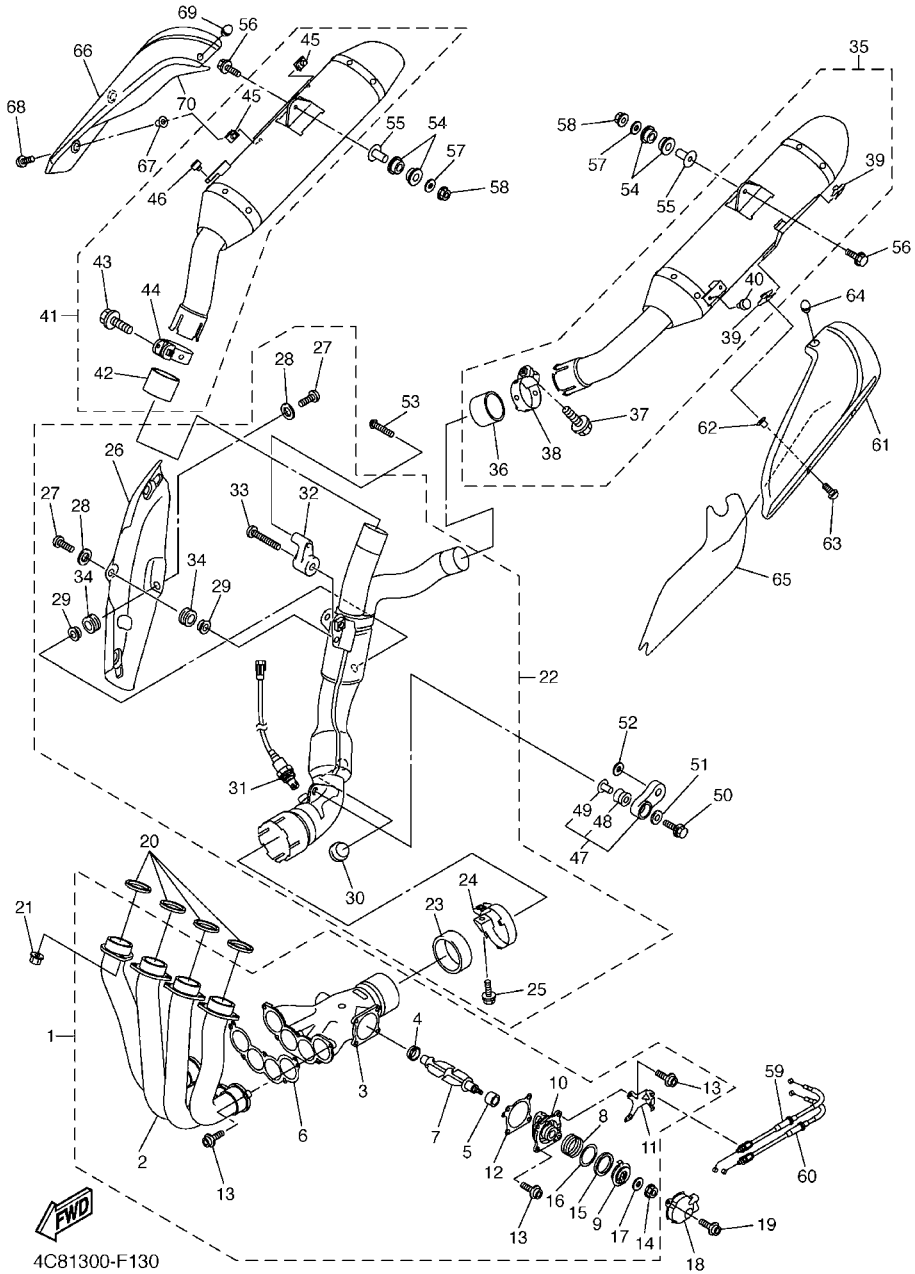

FIG. 13 EXHAUST

REF. NO.	PART NO.	DESCRIPTION	4C8B	4C8C	4C8D			REMARKS
28	90201–06079	.WASHER, PLATE	4	4	4			
29	90387–06188	.COLLAR	4	4	4			
30	4FM–24181–00	.DAMPER, LOCATING 1	1	1	1			
31	4C8–8592A–00	.SENSOR, OXYGEN	1	1	1			
32	4C8–21880–00	.STAY ASSY. ,1	1	1	1			
33	90111–08021	.BOLT,HEX. SOCKET BUTTON	1	1	1			
34	90480–12021	.GROMMET	4	4	4			
35	4C8–14710–10	MUFFLER ASSY 1	1	1	1			
36	5VY–14714–00	.GASKET, MUFFLER	1	1	1			
37	90105–08063	.BOLT, FLANGE	1	1	1			
38	5VY–14715–00	.BAND, MUFFLER	1	1	1			
39	90183–060A2	.NUT, SPRING	2	2	2			
40	90338–06007	.PLUG	1	1	1			
41	4C8–14720–10	MUFFLER ASSY 2	1	1	1			
42	5VY–14714–00	.GASKET, MUFFLER	1	1	1			
43	90105–08063	.BOLT, FLANGE	1	1	1			
44	3D8–14715–00	.BAND, MUFFLER	1	1	1			
45	90183–060A2	.NUT, SPRING	2	2	2			
46	90338–06007	.PLUG	1	1	1			
47	4C8–21890–00	STAY ASSY. ,2	1	1	1			
48	5VY–14747–00	.DAMPER, MUFFLER	1	1	1			
49	90387–08021	.COLLAR	1	1	1			
50	95812–08040	BOLT, FLANGE	1	1	1			
51	90201–087G2	WASHER, PLATE	1	1	1			
52	90201–10054	WASHER, PLATE	1	1	1			
53	90111–08058	BOLT,HEX. SOCKET BUTTON	1	1	1			
54	5VY–27424–00	DAMPER, FOOTREST 2	4	4	4			

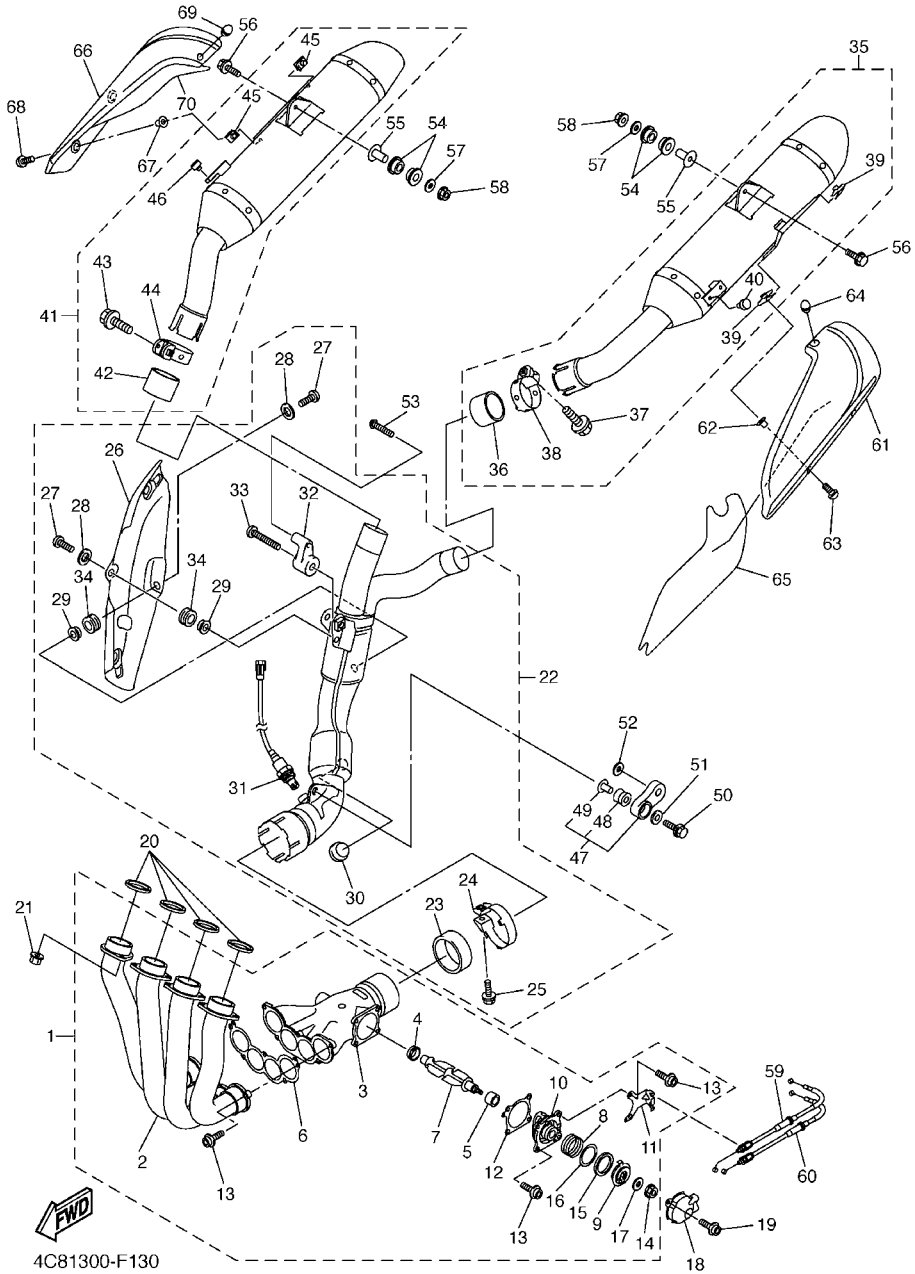

FIG. 13 EXHAUST

REF. NO.	PART NO.	DESCRIPTION	4C8B	4C8C	4C8D			REMARKS
55	90387–08020	COLLAR	2	2	2			
56	95814–08045	BOLT, FLANGE	2	2	2			
57	90201–08034	WASHER, PLATE	2	2	2			
58	95604–08200	NUT, U FLANGE	2	2	2			
59	4C8–1133E–01	CABLE, PULLEY 1	1	1	1			
60	4C8–1133F–01	CABLE, PULLEY 2	1	1	1			
61	4C8–14718–00–P0	PROTECTOR, MUFFLER 1	1	1	1			MBL2
62	90387–062L2	COLLAR	2	2	2			
63	90111–06038	BOLT,HEX. SOCKET BUTTON	2	2	2			
64	4C8–14757–00	DAMPER, MUFFLER 2	1	1	1			
65	4C8–1475P–00	SEAT	1	1	1			
66	4C8–14728–00–P0	PROTECTOR, MUFFLER 2	1	1	1			MBL2
67	90387–062L2	COLLAR	2	2	2			
68	90111–06038	BOLT,HEX. SOCKET BUTTON	2	2	2			
69	4C8–14757–00	DAMPER, MUFFLER 2	1	1	1			
70	4C8–1476P–00	SEAT	1	1	1			

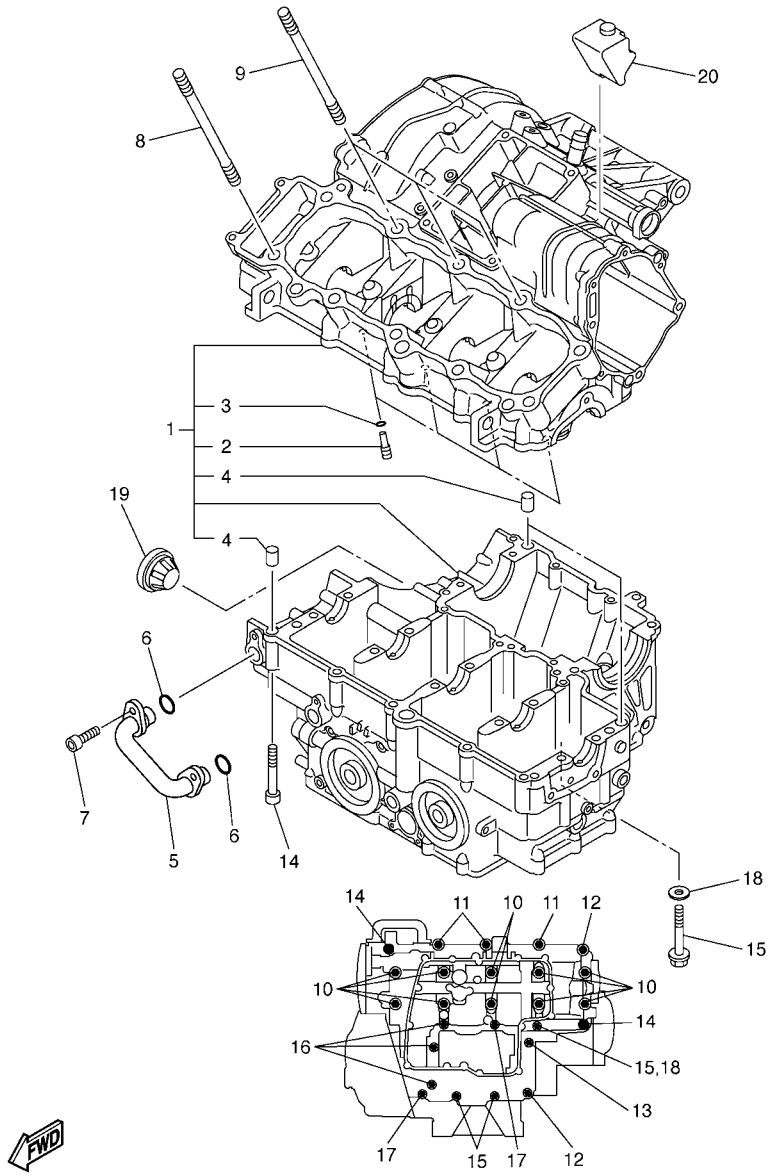

5VY1300-C140

FIG. 14 CRANKCASE

REF. NO.	PART NO.	DESCRIPTION	4C8B	4C8C	4C8D			REMARKS
1	4C8–15100–00	CRANKCASE ASSY	1	1	1			
2	5EB–15155–00	.NOZZLE 3	4	4	4			
3	93210–04092	.O-RING	4	4	4			
4	99530–10014	.PIN, DOWEL	3	3	3			
5	5VY–13418–10	PIPE, OIL 2	1	1	1			
6	93210–14003	O-RING	2	2	2			
7	90110–06161	BOLT, HEXAGON SOCKET HEAD	2	2	2			
8	90116–10032	BOLT, STUD	7	7	7			
9	90116–10023	BOLT, STUD	3	3	3			
10	90119–09003	BOLT, WITH WASHER	10	10	10			
11	95812–08050	BOLT, FLANGE	3	3	3			
12	95812–08060	BOLT, FLANGE	2	2	2			
13	90105–08101	BOLT, FLANGE	1	1	1			
14	90109–06100	BOLT	2	2	2			
15	95812–06060	BOLT, FLANGE	3	3	3			
16	95812–06070	BOLT, FLANGE	3	3	3			
17	95812–06050	BOLT, FLANGE	2	2	2			
18	90430–06166	GASKET	1	1	1			
19	5PW–15361–00	GAUGE, LEVEL	1	1	1			
20	5VY–15316–00	DAMPER, ENGINE MOUNT 1	1	1	1			

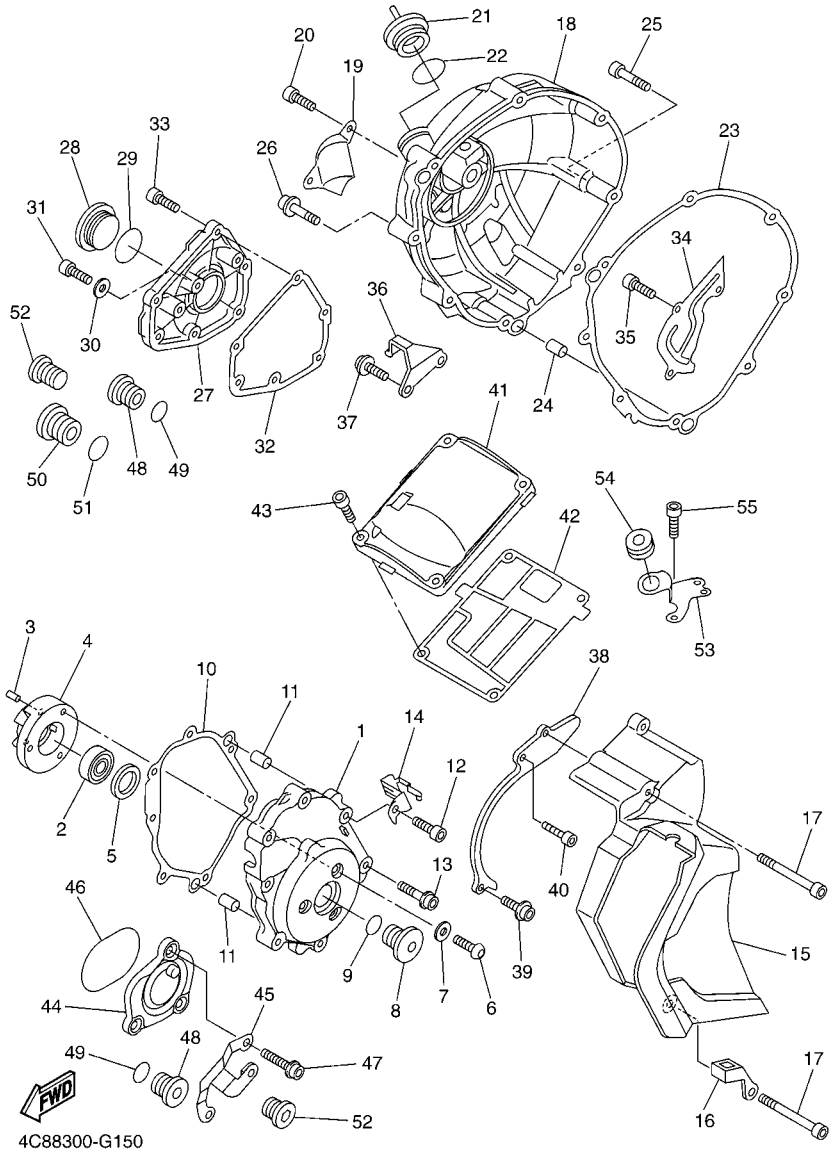

FIG. 15 CRANKCASE COVER 1

REF. NO.	PART NO.	DESCRIPTION	4C8B	4C8C	4C8D			REMARKS
1	5VY–15411–00	COVER, CRANKCASE 1	1	1	1			
2	93306–20124	BEARING	1	1	1			
3	93605–10108	PIN, DOWEL	2	2	2			
4	5VY–15164–00	HOUSING, BEARING 2	1	1	1			
5	5VY–15542–00	COLLAR 2	1	1	1			
6	90149–06064	SCREW	3	3	3			
7	90201–06431	WASHER, PLATE	3	3	3			
8	5PX–15189–00	PLUG	1	1	1			
9	93210–22382	O-RING	1	1	1			
10	2D1–15451–10	GASKET, CRANKCASE COVER 1	1	1	1			
11	99480–10018	PIN	2	2	2			
12	90109–06031	BOLT	4	4	4			
13	90110–08068	BOLT, HEXAGON SOCKET HEAD	3	3	3			
14	4C8–15544–00	STAY 1	1	1	1			
15	4C8–15418–00	COVER, CHAIN CASE	1	1	1			
16	90461–08002	CLAMP	1	1	1			
17	90110–06255	BOLT, HEXAGON SOCKET HEAD	3	3	3			
18	4C8–15421–00	COVER, CRANKCASE 2	1	1	1			
19	5VY–15499–00	PROTECTOR, COVER	1	1	1			
20	92014–06014	BOLT, BUTTON HEAD	2	2	2			
21	3F9–15362–00	PLUG, OIL LEVEL	1	1	1			
22	93210–27194	O-RING	1	1	1			
23	4C8–15461–00	GASKET, CRANKCASE COVER 2	1	1	1			
24	93610–20189	PIN, DOWEL	2	2	2			
25	90109–06016	BOLT	7	7	7			
26	90110–06112	BOLT, HEXAGON SOCKET HEAD	1	1	1			
27	5VY–15416–00	COVER, OIL PUMP	1	1	1			

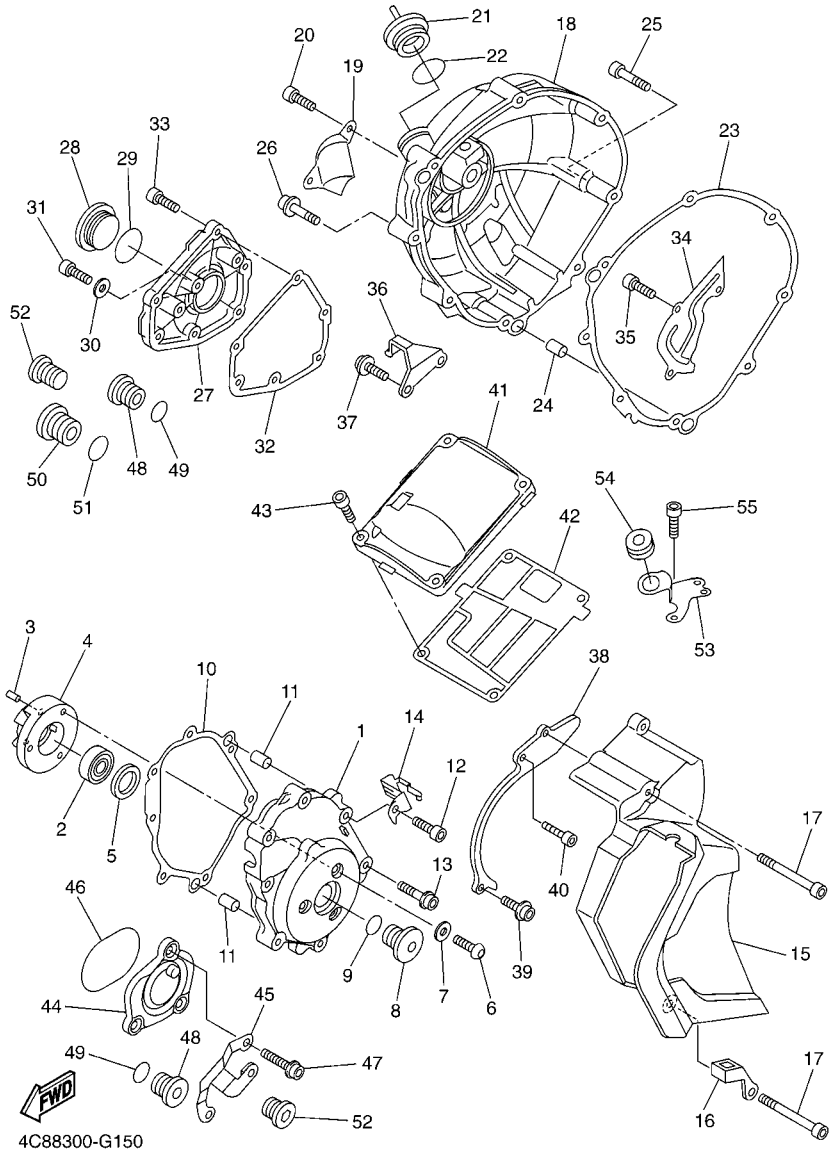

FIG. 15 CRANKCASE COVER 1

REF. NO.	PART NO.	DESCRIPTION	4C8B	4C8C	4C8D			REMARKS
28	90340–32004	PLUG, STRAIGHT SCREW	1	1	1			
29	93210–32172	O-RING	1	1	1			
30	90430–08143	GASKET	1	1	1			
31	92014–08016	BOLT, BUTTON HEAD	1	1	1			
32	4C8–15456–00	GASKET, OIL PUMP COVER 1	1	1	1			
33	90109–06014	BOLT	6	6	6			
34	5VY–11165–00	PLATE, BREATHER	1	1	1			
35	90110–06182	BOLT, HEXAGON SOCKET HEAD	3	3	3			
36	4C8–15441–00	HOLDER, CLUTCH CABLE	1	1	1			
37	90110–06276	BOLT, HEXAGON SOCKET HEAD	1	1	1			
38	4B1–15113–00	PLATE	1	1	1			
39	90110–06277	BOLT, HEXAGON SOCKET HEAD	1	1	1			
40	90110–06276	BOLT, HEXAGON SOCKET HEAD	1	1	1			
41	5VY–15413–00	COVER	1	1	1			
42	4C8–15462–00	GASKET, CRANKCASE COVER 3	1	1	1			
43	90109–06015	BOLT	4	4	4			
44	4C8–15431–00	COVER, CRANKCASE 3	1	1	1			
45	4C8–15199–00	BRACKET	1	1	1			
46	93210–57003	O-RING	1	1	1			
47	90109–06014	BOLT	3	3	3			
48	36Y–15189–00	PLUG	3	3	3			
49	93210–16325	O-RING	3	3	3			
50	4H7–15189–00	PLUG	1	1	1			
51	93210–22382	O-RING	1	1	1			
52	90340–12003	PLUG, STRAIGHT SCREW	2	2	2			
53	4C8–12443–00	STAY	1	1	1			
54	90480–13014	GROMMET	1	1	1			

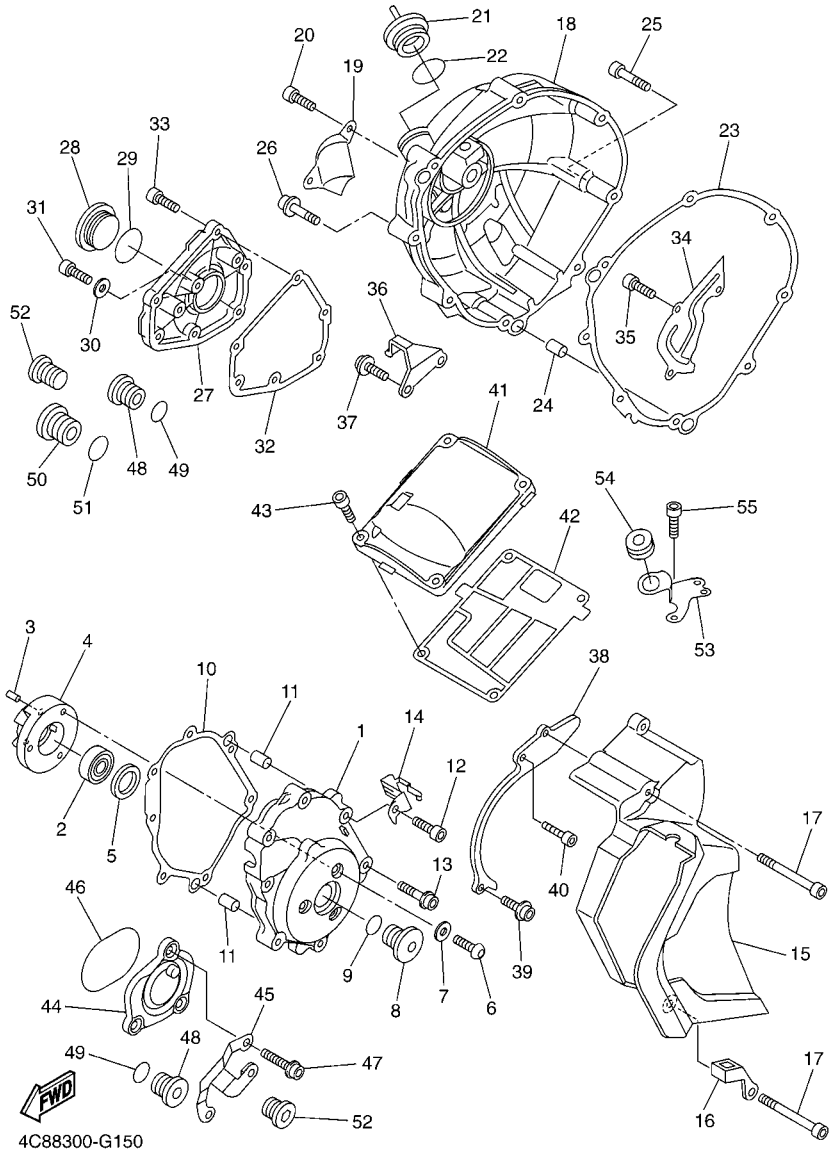

FIG. 15 CRANKCASE COVER 1

REF. NO.	PART NO.	DESCRIPTION	4C8B	4C8C	4C8D			REMARKS
55	91380–06014	BOLT	2	2	2			

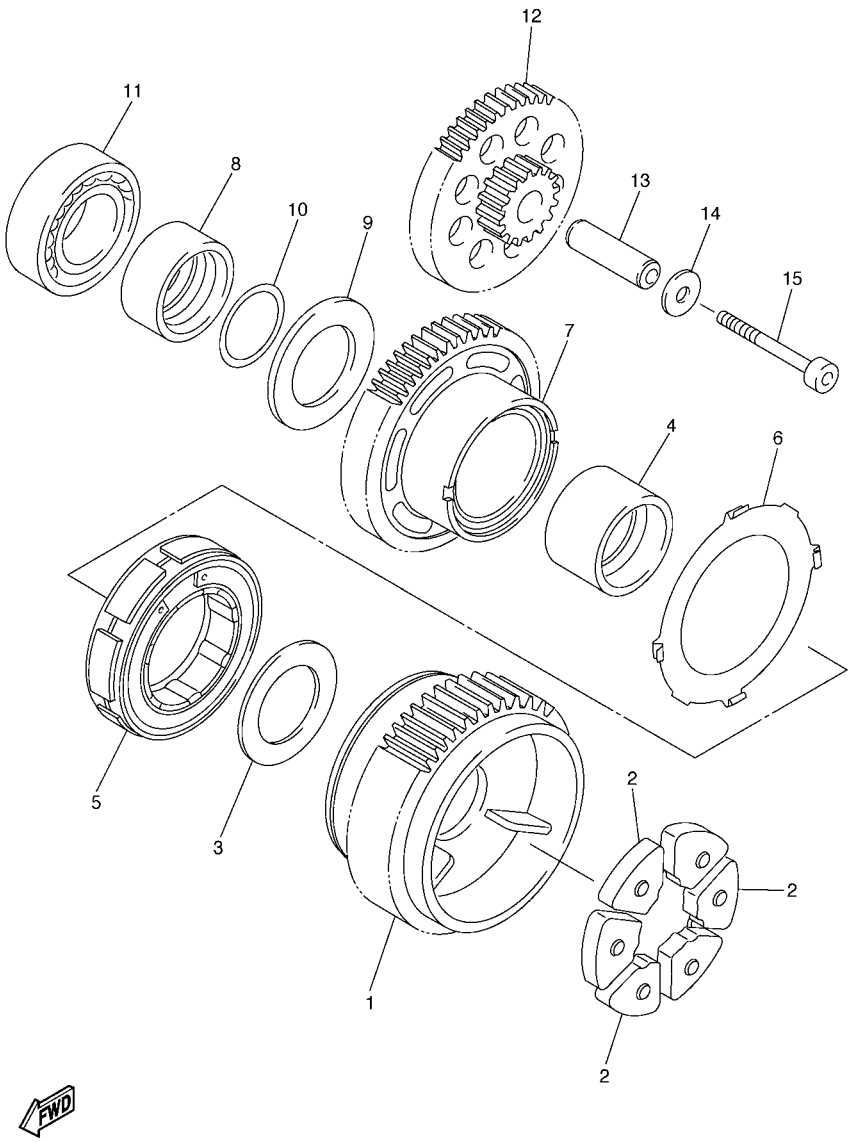

5VY1300-C160

FIG. 16 STARTER

REF. NO.	PART NO.	DESCRIPTION	4C8B	4C8C	4C8D			REMARKS
1	2D1–11537–00	GEAR, DRIVEN	1	1	1			
2	5VY–16155–00	ABSORBER 1	3	3	3			
3	90201–20016	WASHER, PLATE	1	1	1			
4	5VY–11478–00	COLLAR	1	1	1			
5	5VY–15570–00	STARTER CLUTCH ASSY	1	1	1			
6	5VY–15586–00	PLATE, STARTER CLUTCH ASSY	1	1	1			
7	5VY–15515–00	GEAR 3	1	1	1			
8	5VY–11445–00	SPACER	1	1	1			
9	90201–20017	WASHER, PLATE	1	1	1			
10	93210–18397	O-RING	1	1	1			
11	93306–20230	BEARING	1	1	1			
12	5VY–15517–00	GEAR, IDLER 2	1	1	1			
13	5VY–15521–00	SHAFT 1	1	1	1			
14	90201–06589	WASHER, PLATE	1	1	1			
15	90110–06176	BOLT, HEXAGON SOCKET HEAD	1	1	1			

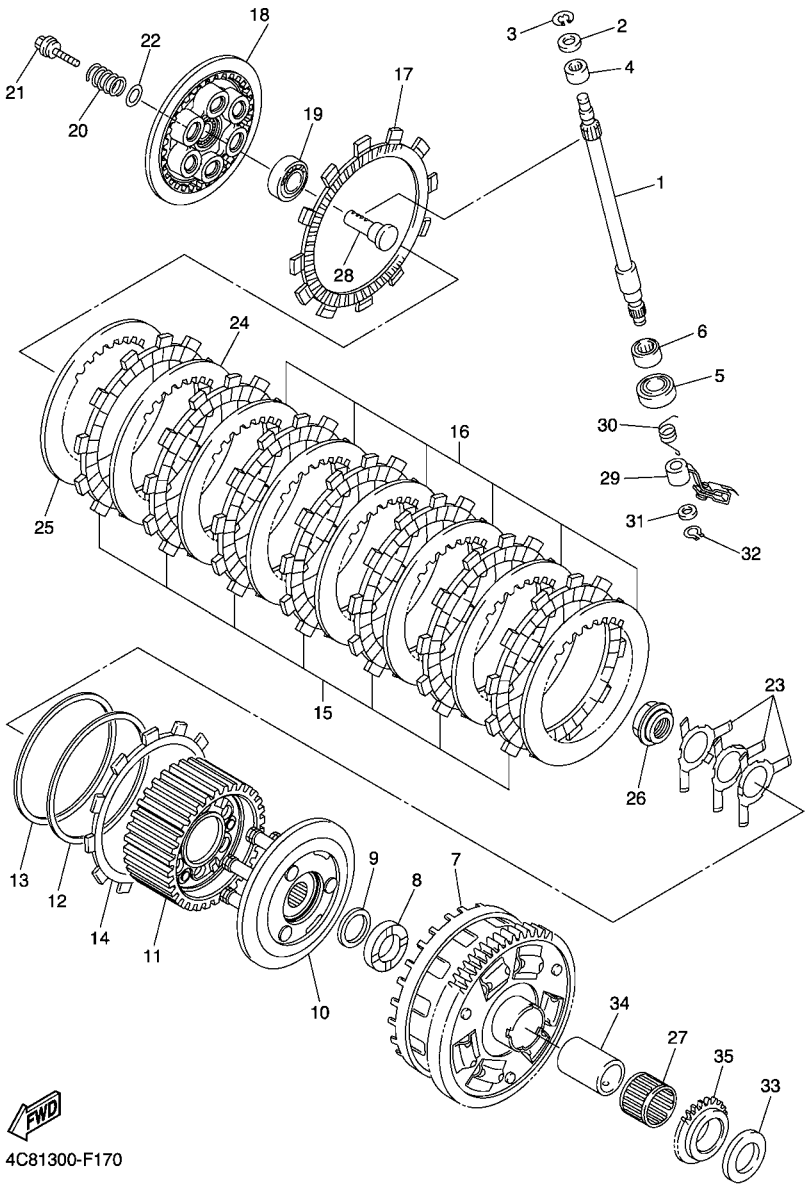

FIG. 17 CLUTCH

REF. NO.	PART NO.	DESCRIPTION	4C8B	4C8C	4C8D			REMARKS
1	2D1–16382–00	AXLE, PUSH LEVER	1	1	1			
2	92907–08600	WASHER, PLATE	1	1	1			
3	99001–07600	CIRCLIP	1	1	1			
4	93317–11096	BEARING	1	1	1			
5	93102–15212	OIL SEAL	1	1	1			
6	93315–21570	BEARING	1	1	1			
7	4C8–16150–00	PRIMARY DRIVEN GEAR COMP.	1	1	1			
8	4C8–16154–00	PLATE, THRUST 1	1	1	1			
9	90208–25002	WASHER, CONICAL SPRING	1	1	1			
10	4C8–16360–00	PRESSURE PLATE ASSY 2	1	1	1			
11	4C8–16370–10	CLUTCH BOSS ASSY	1	1	1			
12	5VY–16384–00	PLATE, SEAT	1	1	1			
13	4B1–16383–00	SPRING, CLUTCH BOSS	1	1	1			
14	5VY–16331–00	PLATE, FRICTION 2	1	1	1			
15	5VY–16321–00	PLATE, FRICTION	7	7	7			
16	5VY–16325–00	PLATE, CLUTCH 2	6	6	6			
17	5VY–16330–00	PLATE, FRICTION 2	1	1	1			
18	4C8–16351–00	PLATE, PRESSURE 1	1	1	1			
19	93306–00304	BEARING	1	1	1			
20	90501–240A0	SPRING, COMPRESSION	6	6	6			
21	90159–06026	SCREW, WITH WASHER	6	6	6			
22	4B1–16384–00	PLATE, SEAT	6	6	6			
23	2C0–16539–00	SPRING	3	3	3			
24	5VY–16325–00	PLATE, CLUTCH 2	1	1	1			UR (T2.0)
	4B1–16325–00	PLATE, CLUTCH 2	1	1	1			UR (T2.3)
25	5VY–16325–00	PLATE, CLUTCH 2	1	1	1			UR (T2.0)
	4B1–16324–00	PLATE, CLUTCH 1	1	1	1			UR (T1.6)

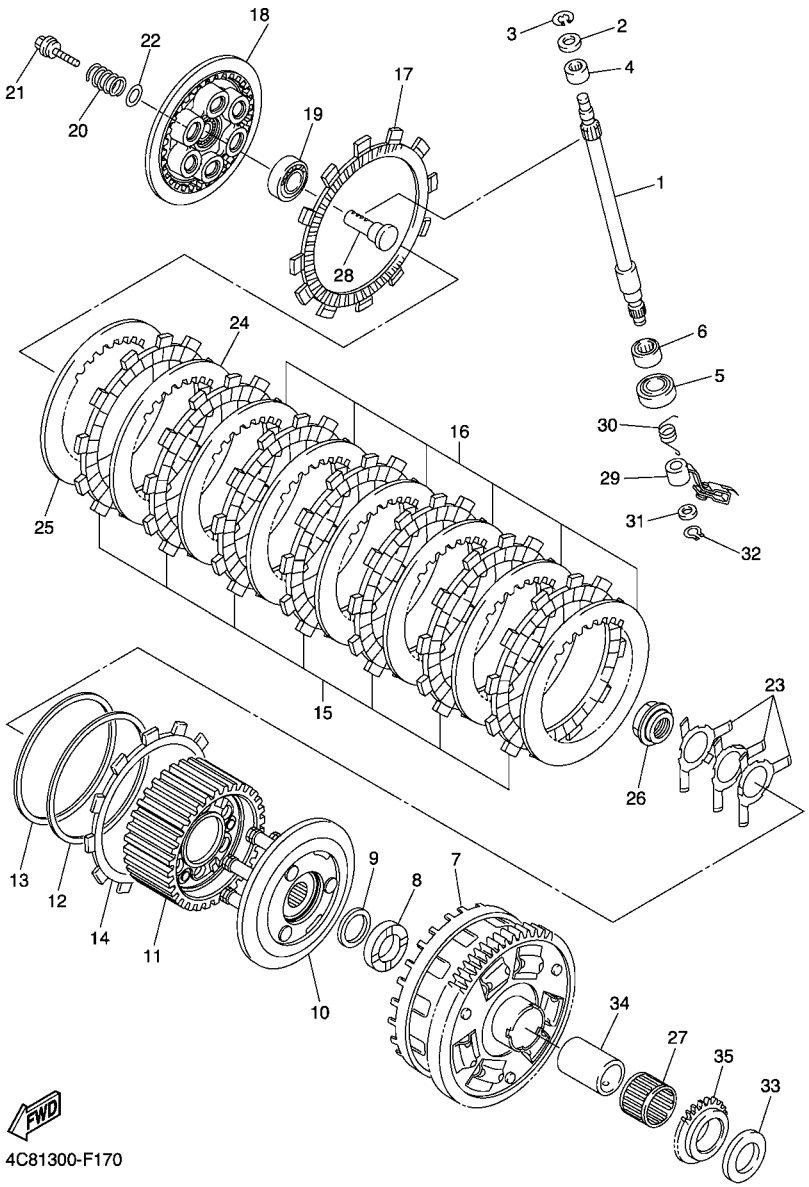

FIG. 17 CLUTCH

REF. NO.	PART NO.	DESCRIPTION	4C8B	4C8C	4C8D			REMARKS
25	4B1–16325–00	PLATE, CLUTCH 2	1	1	1			UR (T2.3)
26	4C8–16377–00	NUT, LOCK	1	1	1			
27	93310–232R9	BEARING	1	1	1			
28	4XV–16356–01	ROD, PUSH 1	1	1	1			
29	4C8–16340–00	PUSH LEVER ASSY	1	1	1			
30	90508–16041	SPRING, TORSION	1	1	1			
31	90201–10029	WASHER, PLATE	1	1	1			
32	99009–10400	CIRCLIP	1	1	1			
33	5VY–16164–00	PLATE, THRUST 2	1	1	1			
34	5VY–16181–00	SPACER 1	1	1	1			
35	5VY–13354–00	SPROCKET, DRIVE	1	1	1			

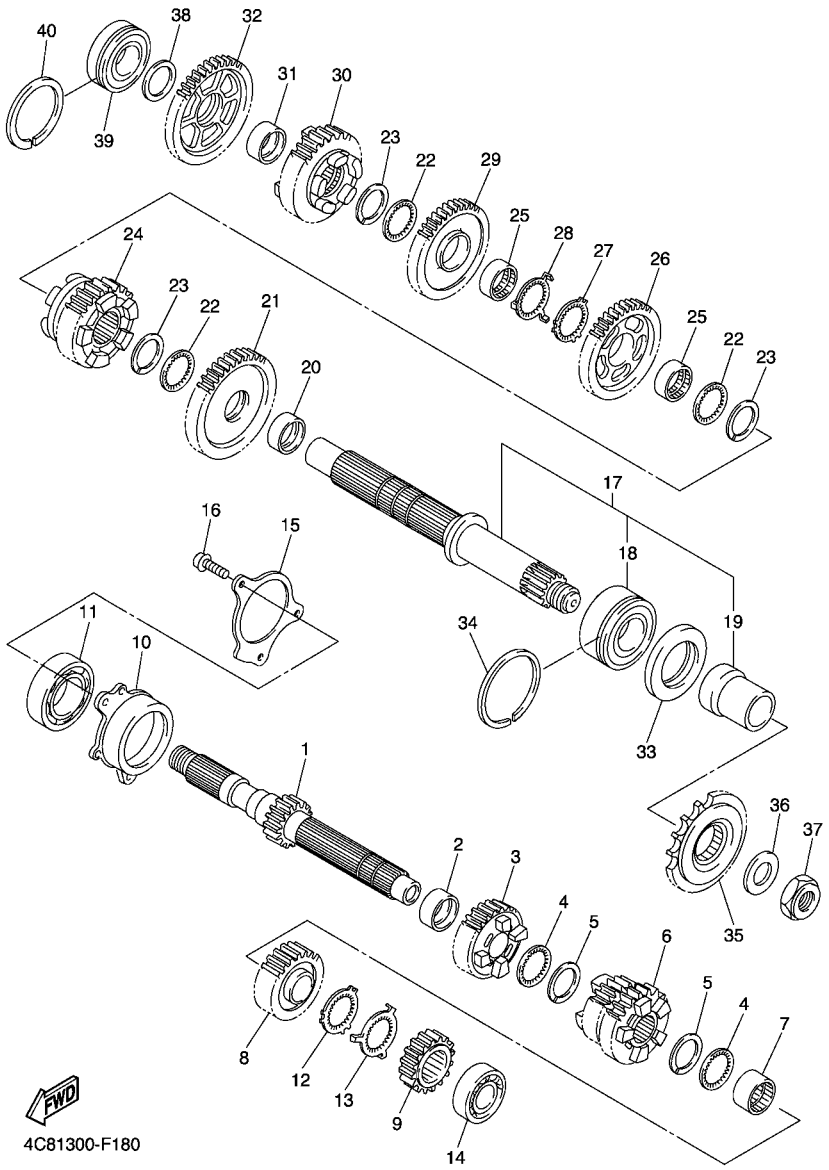

FIG. 18 TRANSMISSION

REF. NO.	PART NO.	DESCRIPTION	4C8B	4C8C	4C8D			REMARKS
1	4C8–17411–00	AXLE, MAIN (15T)	1	1	1			
2	90387–28003	COLLAR	1	1	1			
3	4C8–17151–00	GEAR, 5TH PINION (22T)	1	1	1			
4	90209–25011	WASHER	2	2	2			
5	93440–28184	CIRCLIP	2	2	2			
6	2D1–17131–00	GEAR, 3RD PINION (21/23T)	1	1	1			
7	90387–25007	COLLAR	1	1	1			
8	4C8–17161–00	GEAR, 6TH PINION (26T)	1	1	1			
9	2D1–17121–10	GEAR, 2ND PINION (16T)	1	1	1			
10	5VY–15163–00	HOUSING, BEARING 1	1	1	1			
11	93306–20652	BEARING	1	1	1			
12	90214–25004	WASHER, CLAW	1	1	1			
13	90214–25003	WASHER, CLAW	1	1	1			
14	93306–27208	BEARING	1	1	1			
15	5VY–17446–00	PLATE	1	1	1			
16	90110–06164	BOLT, HEXAGON SOCKET HEAD	3	3	3			
17	4C8–17402–00	DRIVE AXLE ASSY	1	1	1			
18	93305–20605	.BEARING	1	1	1			
19	5VY–17442–00	.COLLAR, DISTANCE	1	1	1			
20	90387–31003	COLLAR	1	1	1			
21	4C8–17221–00	GEAR, 2ND WHEEL (33T)	1	1	1			
22	90209–28008	WASHER	3	3	3			
23	93440–31187	CIRCLIP	3	3	3			
24	4C8–17261–00	GEAR, 6TH WHEEL (33T)	1	1	1			
25	90387–28004	COLLAR	2	2	2			
26	5VY–17241–00	GEAR, 4TH WHEEL (35T)	1	1	1			
27	90214–29002	WASHER, CLAW	1	1	1			

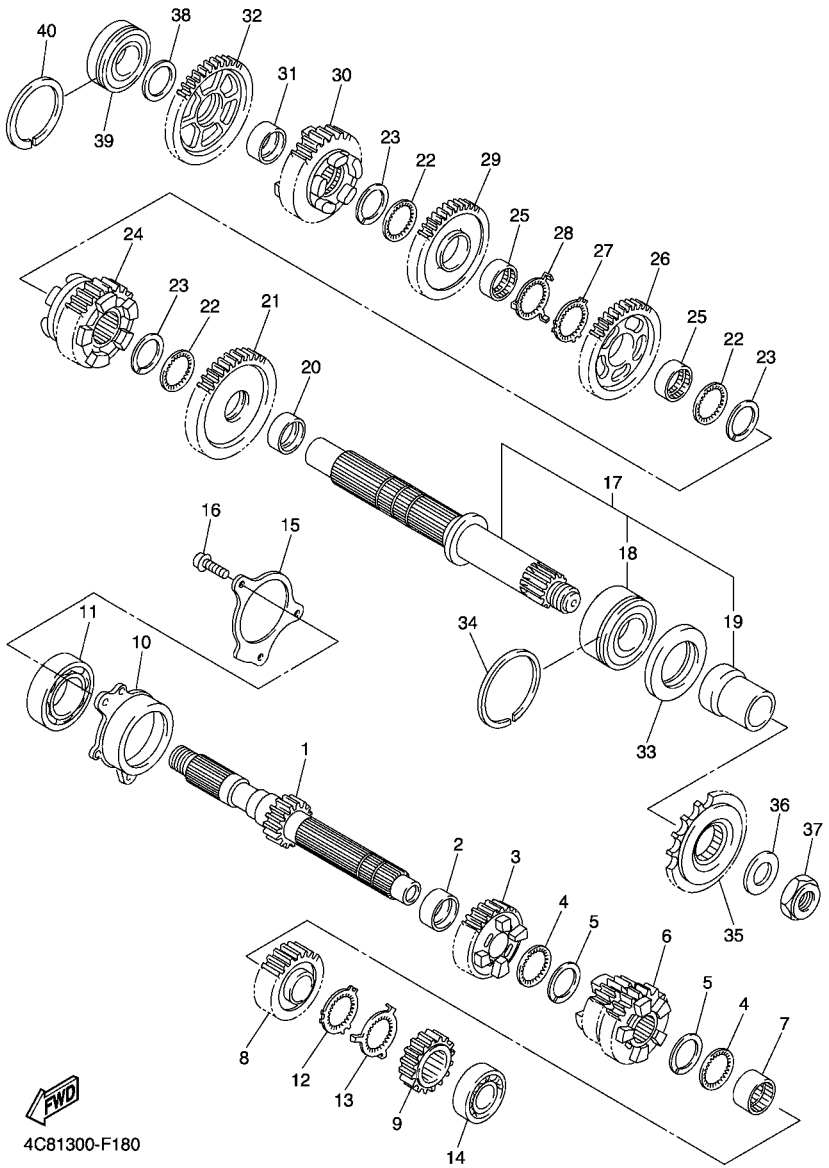

FIG. 18 TRANSMISSION

REF. NO.	PART NO.	DESCRIPTION	4C8B	4C8C	4C8D			REMARKS
28	90214–28002	WASHER, CLAW	1	1	1			
29	5VY–17231–00	GEAR, 3RD WHEEL (37T)	1	1	1			
30	4C8–17251–00	GEAR, 5TH WHEEL (30T)	1	1	1			
31	90387–25008	COLLAR	1	1	1			
32	5VY–17211–00	GEAR,1ST WHEEL (38T)	1	1	1			
33	93102–40330	OIL SEAL	1	1	1			
34	93440–62032	CIRCLIP	1	1	1			
35	4C8–17460–00	SPROCKET,DRIVE (17T)	1	1	1			
36	90201–22015	WASHER, PLATE	1	1	1			
37	90179–22019	NUT	1	1	1			
38	90201–257H0	WASHER, PLATE	1	1	1			
39	93306–205A2	BEARING	1	1	1			
40	93440–52009	CIRCLIP	1	1	1			

FIG. 19 SHIFT CAM & FORK

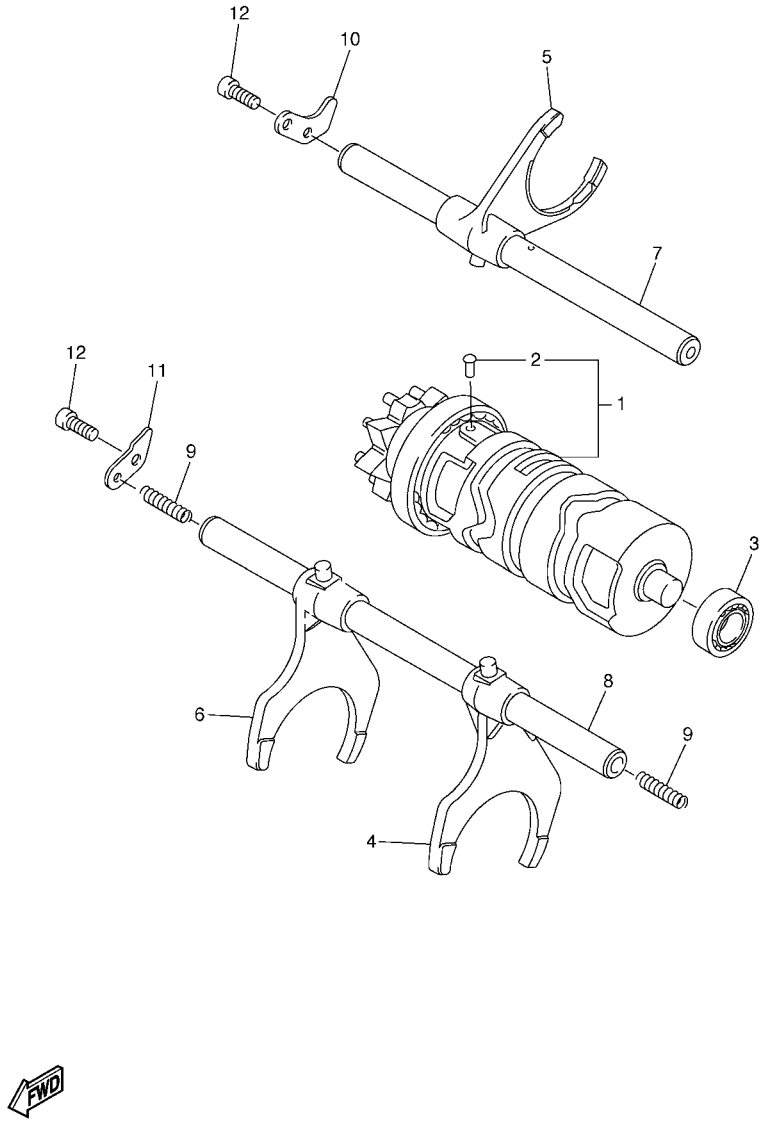

REF. NO.	PART NO.	DESCRIPTION	4C8B	4C8C	4C8D			REMARKS
1	5VY–18540–00	SHIFT CAM ASSY	1	1	1			
2	136–18542–00	.POINT, NEUTRAL	1	1	1			
3	93306–00106	BEARING	1	1	1			
4	5VY–18511–01	FORK, SHIFT 1	1	1	1			
5	2D1–18512–00	FORK, SHIFT 2	1	1	1			
6	5VY–18513–01	FORK, SHIFT 3	1	1	1			
7	5VY–18531–00	BAR, SHIFT FORK GUIDE 1	1	1	1			
8	5VY–18535–00	BAR, SHIFT FORK GUIDE 2	1	1	1			
9	90501–064L1	SPRING, COMPRESSION	2	2	2			
10	5VY–18536–00	STOPPER, SHIFT BAR	1	1	1			
11	5VY–18562–00	PLATE, STOPPER 2	1	1	1			
12	90110–06182	BOLT, HEXAGON SOCKET HEAD	2	2	2			

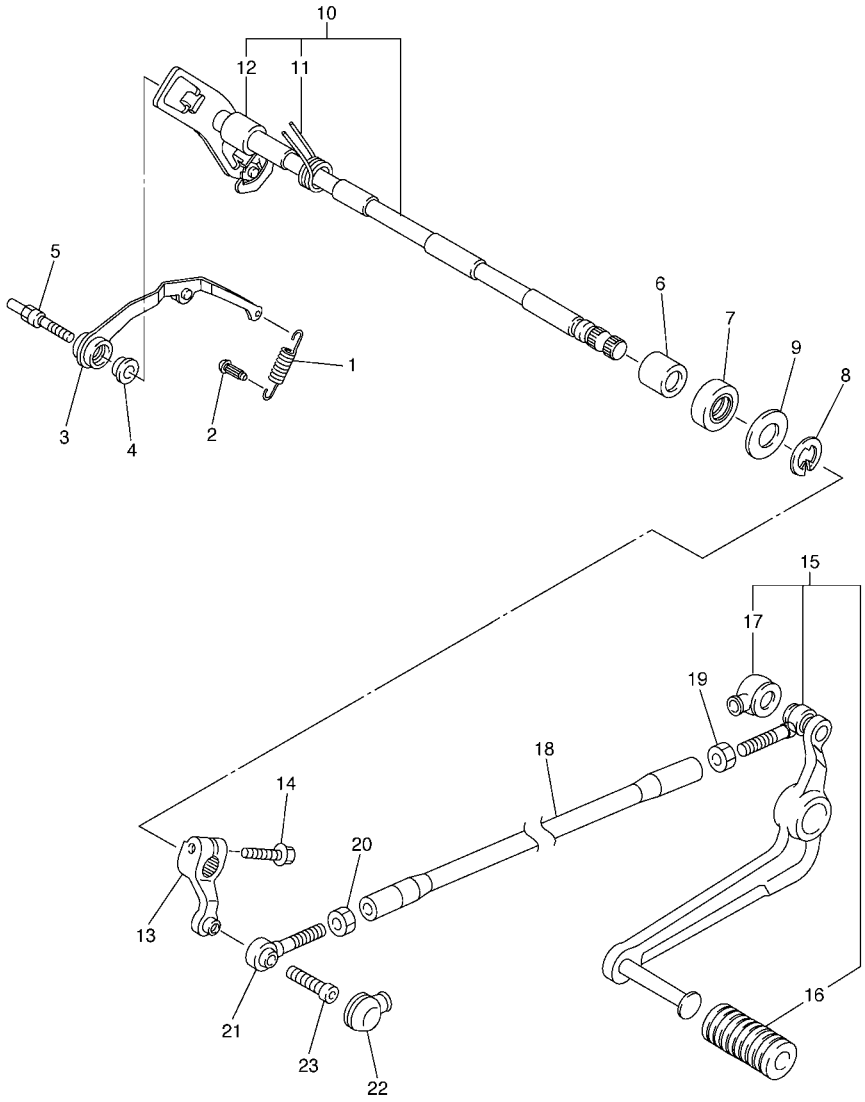

5VY1300-C200

FIG. 20 SHIFT SHAFT

REF. NO.	PART NO.	DESCRIPTION	4C8B	4C8C	4C8D			REMARKS
1	5VY–18144–00	HANGER, SPRING	1	1	1			
2	132–16346–00	HOOK, SPRING	1	1	1			
3	5VY–18140–00	STOPPER LEVER ASSY	1	1	1			
4	90387–0804S	COLLAR	1	1	1			
5	5VY–18127–10	STOPPER, SCREW	1	1	1			
6	93317–11295	BEARING	2	2	2			
7	93102–12106	OIL SEAL (SD 12-22-5 HS)	1	1	1			
8	99002–10600	CIRCLIP	1	1	1			
9	90201–12575	WASHER, PLATE	2	2	2			
10	4C8–18101–00	SHIFT SHAFT ASSY	1	1	1			
11	90508–32020	.SPRING, TORSION	1	1	1			
12	90387–1211D	.COLLAR	1	1	1			
13	5VY–18112–00	ARM, SHIFT	1	1	1			
14	95022–06020	BOLT, FLANGE	1	1	1			
15	5VY–18110–00	SHIFT PEDAL ASSY	1	1	1			
16	5EB–18113–00	.COVER, SHIFT PEDAL	1	1	1			
17	4XV–18154–00	.COVER, DUST	1	1	1			
18	5VY–18115–00	ROD, SHIFT	1	1	1			
19	90170–06228	NUT(COUNTER CLOCKWISE)	1	1	1			
20	95304–06700	NUT	1	1	1			
21	5LV–18116–00	JOINT, ROD 1	1	1	1			
22	4XV–18154–00	COVER, DUST	1	1	1			
23	90111–06019	BOLT,HEX. SOCKET BUTTON	1	1	1			

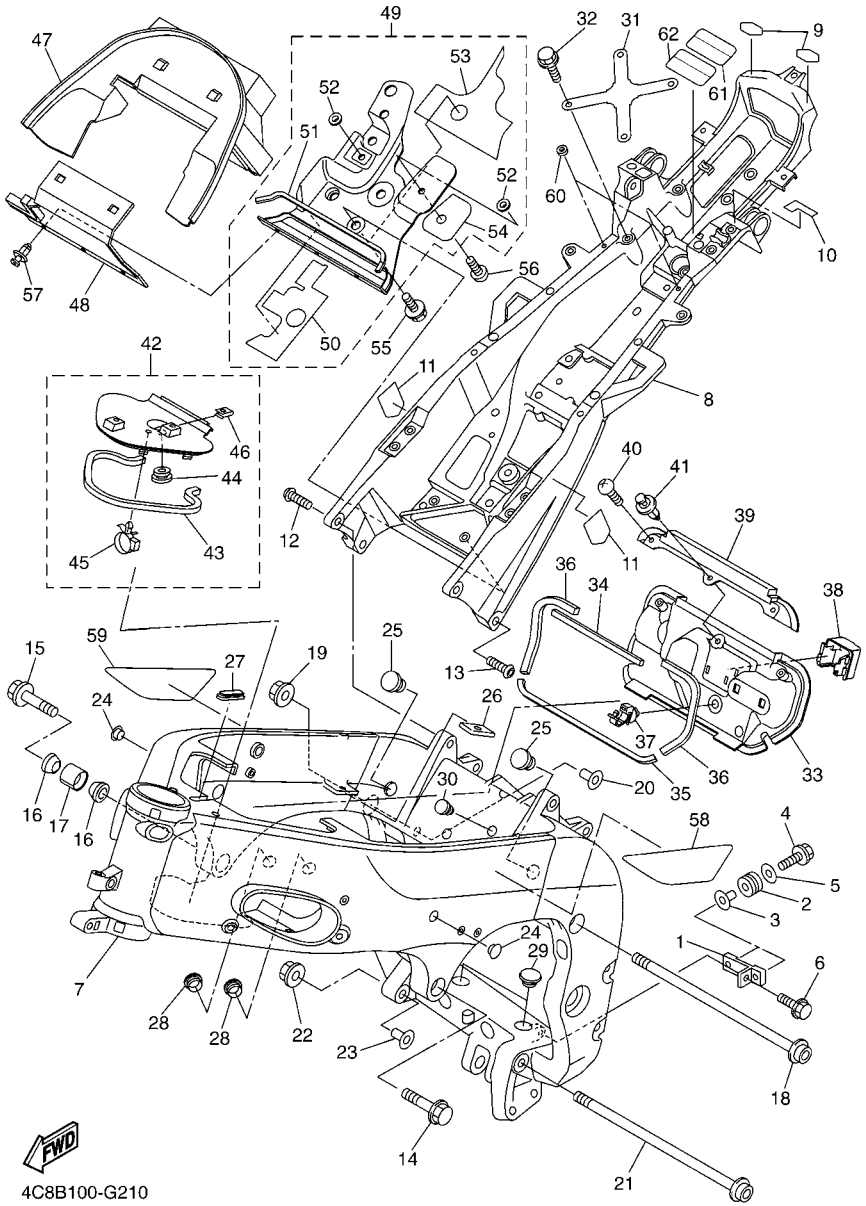

FIG. 21 FRAME

REF. NO.	PART NO.	DESCRIPTION	4C8B	4C8C	4C8D			REMARKS
1	4C8–2116J–00	BRACKET 7	1	1	1			
2	90480–14005	GROMMET	2	2	2			
3	90387–063E6	COLLAR	2	2	2			
4	95022–06020	BOLT, FLANGE	2	2	2			
5	90201–06M31	WASHER, PLATE	2	2	2			
6	95024–06012	BOLT, FLANGE	1	1	1			
7	4C8–21110–01	FRAME COMP.	1		1			
	4C8–21110–11	FRAME COMP.		1				
8	4C8–21190–00	REAR FRAME COMP.	1	1	1			
9	5VY–21268–00	SEAL	2	2	2			
10	5VY–21269–00	SEAL	1	1	1			
11	4C8–2111D–00	SEAL, 1	2	2	2			
12	90149–10043	SCREW	2	2	2			
13	90149–10039	SCREW	2	2	2			
14	95024–10050	BOLT, FLANGE	1	1	1			
15	95024–10050	BOLT, FLANGE	1	1	1			
16	4B1–21414–00	BOSS, ENGINE MOUNT	2	2	2			
17	4B1–21424–00	BOSS, ENGINE MOUNT	1	1	1			
18	90110–10005	BOLT, HEXAGON SOCKET HEAD	1	1	1			
19	90179–10696	NUT	1	1	1			
20	4C8–21495–00	BOLT, ENGINE ADJUSTING	1	1	1			
21	90110–10005	BOLT, HEXAGON SOCKET HEAD	1	1	1			
22	90179–10696	NUT	1	1	1			
23	4C8–21495–00	BOLT, ENGINE ADJUSTING	1	1	1			
24	90338–15004	PLUG	2	2	2			
25	90338–23004	PLUG	2	2	2			
26	2C0–24182–00	DAMPER, LOCATING 2	2	2	2			

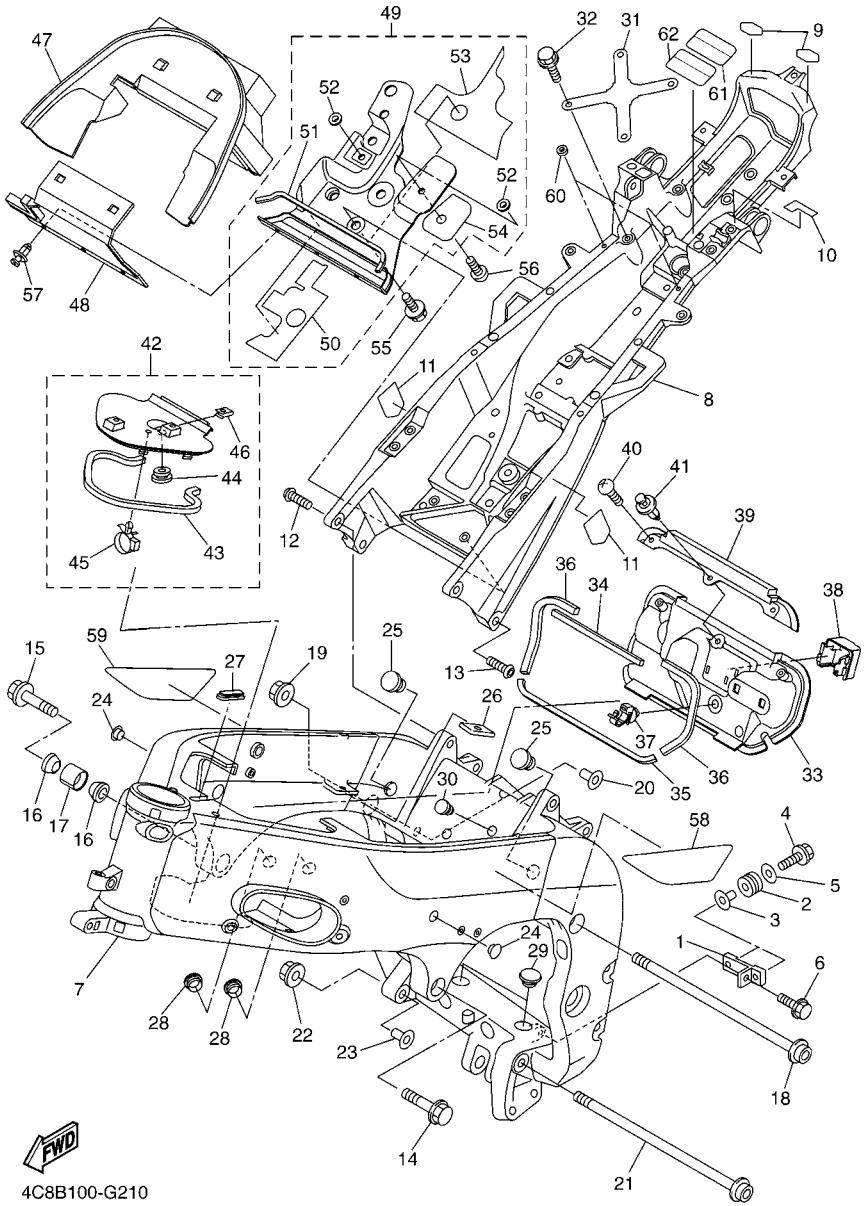

FIG. 21 FRAME

REF. NO.	PART NO.	DESCRIPTION	4C8B	4C8C	4C8D			REMARKS
27	4C8–21773–00	GROMMET	1	1	1			
28	90338–14007	PLUG	4	4	4			
29	90338–23004	PLUG	2	2	2			
30	90338–08008	PLUG	1	1	1			
31	5VY–21131–00	BRACKET	1	1	1			
32	95822–06016	BOLT, FLANGE	4	4	4			
33	4C8–2117M–00	COVER 2	1	1	1			
34	4C8–2174X–00	DAMPER	1	1	1			
35	4C8–21746–00	DAMPER	1	1	1			
36	4C8–2139X–00	DAMPER	2	2	2			
37	90464–10008	CLAMP	1	1	1			
38	2C0–8258J–00	HOUSING, CONNECTEUR 1	1	1	1			
39	4C8–21183–00	PLATE	1	1	1			
40	90167–05080	SCREW, TAPPING	2	2	2			
41	90269–06081	RIVET	1	1	1			
42	4C8–2110M–10	COVER ASSY 1	1	1	1			
43	4C8–2174Y–00	.DAMPER	1	1	1			
44	90480–01333	.GROMMET	1	1	1			
45	90464–16006	.CLAMP	1	1	1			
46	90183–06069	.NUT, SPRING	2	2	2			
47	4C8–2110N–00	COVER ASSY 2	1	1	1			
48	4C8–2110L–00	COVER ASSY.,4	1	1	1			
49	4C8–2110P–00	COVER ASSY 3	1	1	1			
50	4C8–2112B–00	.SEAT 1	1	1	1			
51	4C8–2113B–00	.DAMPER	1	1	1			
52	90387–053Y7	.COLLAR	2	2	2			
53	4C8–2113C–00	.SHEET, 2	1	1	1			

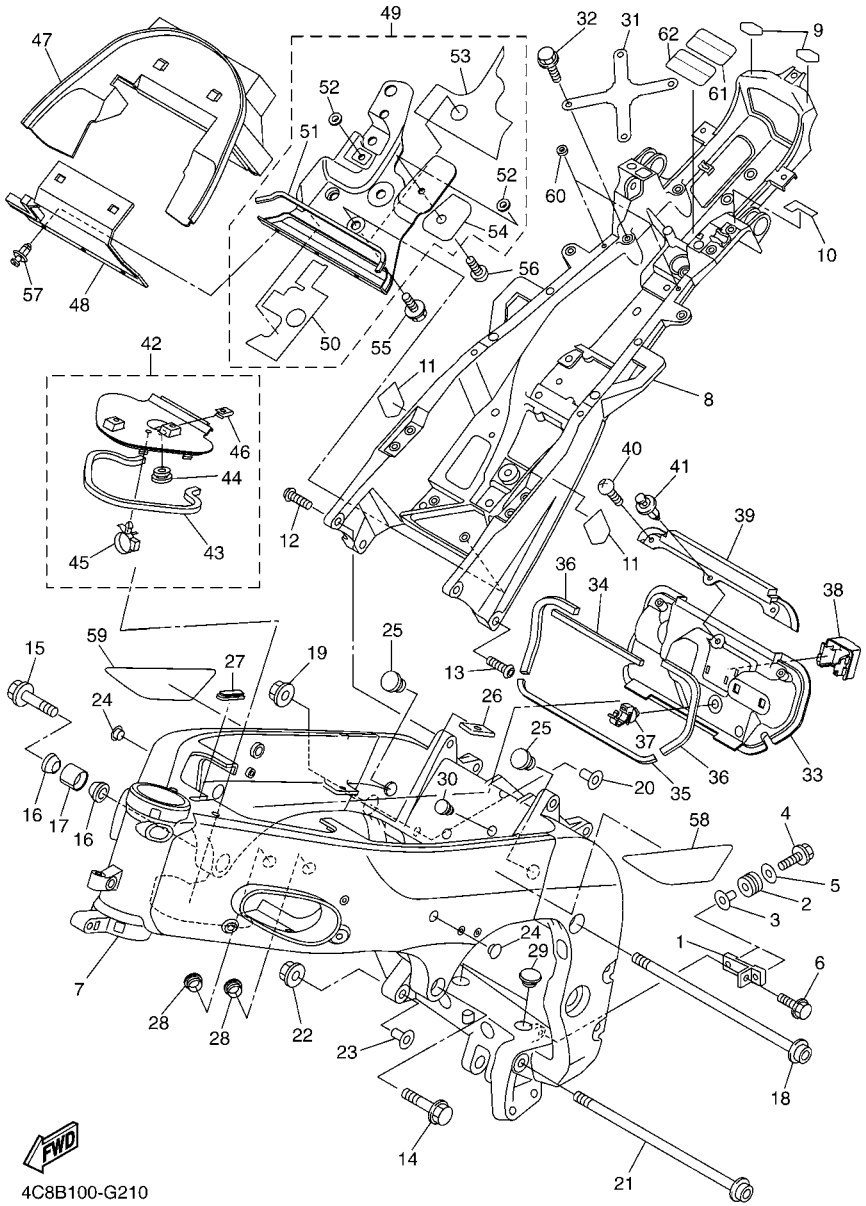

FIG. 21 FRAME

REF. NO.	PART NO.	DESCRIPTION	4C8B	4C8C	4C8D			REMARKS
54	4C8–2113D–00	.SHEET, 3	1	1	1			
55	90109–06043	BOLT	1	1	1			
56	90111–05002	BOLT,HEX. SOCKET BUTTON	2	2	2			
57	90269–06012	RIVET	3	3	3			
58	4C8–24121–00	SEAT, KNEE GRIP 1	1	1	1			
59	4C8–24122–00	SEAT, KNEE GRIP 2	1	1	1			
60	5SL–84753–00	DAMPER	2	2	2			
61	3TB–24877–A0	LABEL, CAUTION	1	1	1			
62	3TB–24877–B0	LABEL, CAUTION			1			

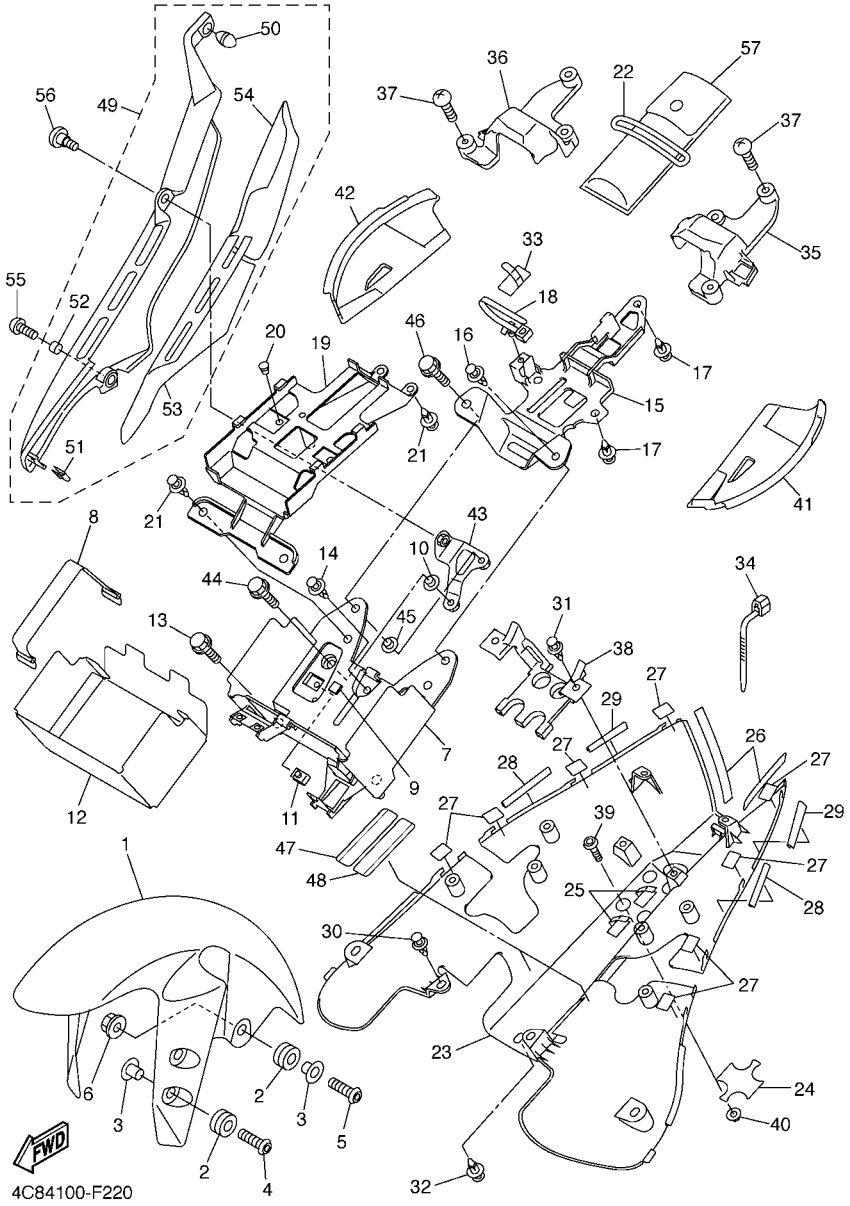

FIG. 22 FENDER

REF. NO.	PART NO.	DESCRIPTION	4C8B	4C8C	4C8D			REMARKS
1	5PW–21511–00–P1	FENDER, FRONT	1	1	1			UR FOR DPBMC
	5PW–21511–00–P6	FENDER, FRONT	1	1	1			UR FOR SMX
	5PW–21511–00–P3	FENDER, FRONT	1	1				UR FOR DRMK
	5PW–21511–00–P0	FENDER, FRONT			1			UR VRC1 FOR BWC1
2	90480–12072	GROMMET	6	6	6			
3	90387–065J6	COLLAR	6	6	6			
4	90111–06043	BOLT,HEX. SOCKET BUTTON	4	4	4			
5	90111–06030	BOLT,HEX. SOCKET BUTTON	2	2	2			
6	95707–06500	NUT, FLANGE	2	2	2			
7	4C8–8212B–00	BOX, BATTERY 1	1	1	1			
8	133–82131–00	BAND, BATTERY	1	1	1			
9	4C8–21649–00	DAMPER	4	4	4			
10	90387–05021	COLLAR	1	1	1			
11	90183–05076	NUT, SPRING	2	2	2			
12	4C8–82122–00	SEAT, BATTERY	1	1	1			
13	90109–06043	BOLT	2	2	2			
14	90269–07076	RIVET	1	1	1			
15	4C8–8212C–00	BOX, BATTERY 2	1	1	1			
16	90269–07076	RIVET	1	1	1			
17	90269–07077	RIVET	2	2	2			
18	90464–34002	CLAMP	1	1	1			
19	4C8–2117T–00	COVER 5	1	1	1			
20	90338–06018	PLUG	2	2	2			
21	90269–07076	RIVET	4	4	4			
22	4XV–21376–00	BAND, TOOL	1	1	1			
23	4C8–21611–00–P0	FENDER, REAR	1	1	1			UR FOR DPBMC
	4C8–21611–00–P1	FENDER, REAR	1	1	1			UR FOR SMX

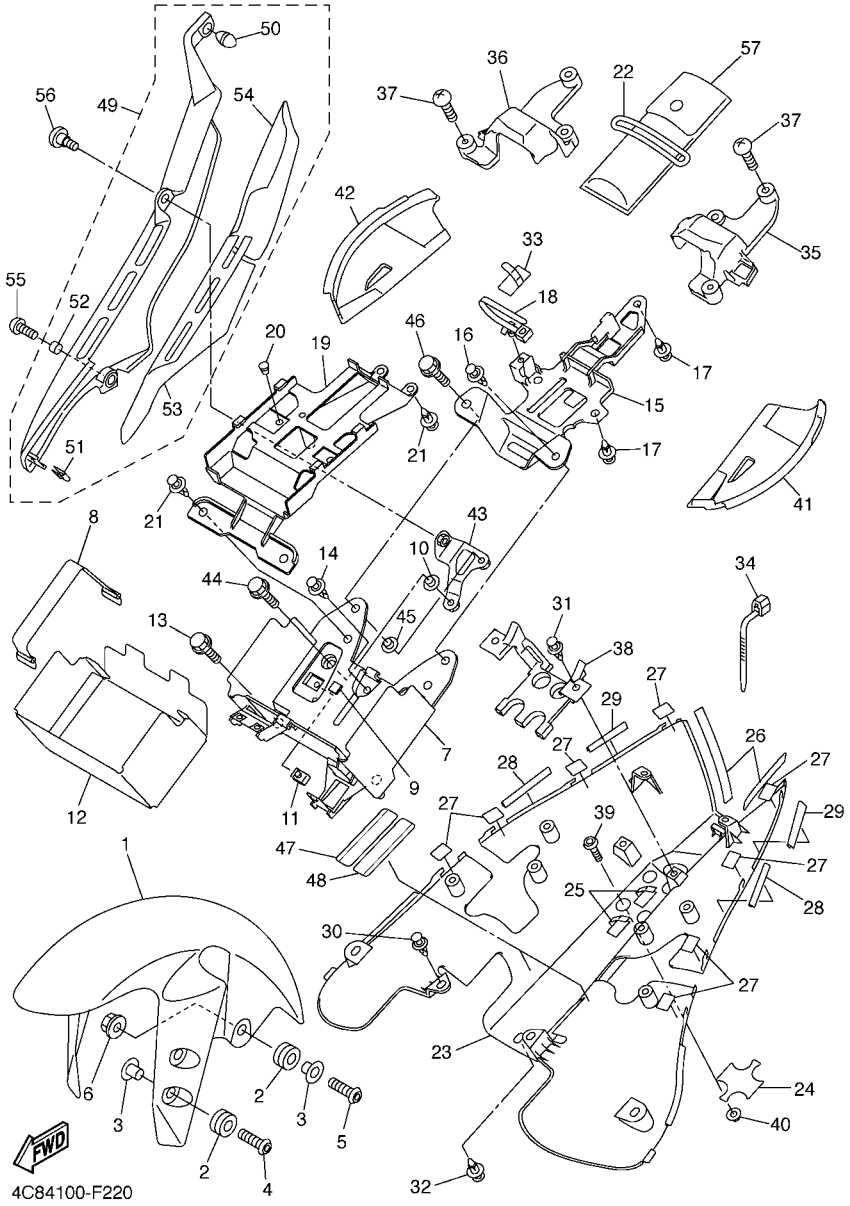

FIG. 22 FENDER

REF. NO.	PART NO.	DESCRIPTION	4C8B	4C8C	4C8D			REMARKS
23	4C8–21611–00–P3	FENDER, REAR	1	1				UR FOR DRMK
	4C8–21611–00–P2	FENDER, REAR			1			UR FOR BWC1
24	5VY–21669–00	SEAL	1	1	1			
25	90465–04020	CLAMP	2	2	2			
26	4C8–21639–00	DAMPER 2	2	2	2			
27	4C8–21735–00	SEAL 2	8	8	8			
28	5VY–21732–00	SEAL 1	2	2	2			
29	5PW–21732–00	SEAL 1	2	2	2			
30	90269–06081	RIVET	2	2	2			
31	90269–06081	RIVET	2	2	2			
32	90269–07077	RIVET	1	1	1			
33	90465–04020	CLAMP	1	1	1			
34	90464–13073	CLAMP	1	1	1			
35	4C8–2163A–00	COVER, REAR FENDER 1	1	1	1			
36	4C8–2163E–00	COVER, REAR FENDER 2	1	1	1			
37	97702–50014	SCREW, TAPPING	6	6	6			
38	4C8–21652–00	PROTECTOR	1	1	1			
39	90111–06052	BOLT,HEX. SOCKET BUTTON	4	4	4			
40	90387–06071	COLLAR	4	4	4			
41	4C8–2164K–00	PATCH 5	1	1	1			
42	4C8–2164L–00	PATCH 6	1	1	1			
43	4C8–2164F–00	STAY 1	1	1	1			
44	90119–05239	BOLT, WITH WASHER	1	1	1			
45	90387–05017	COLLAR	1	1	1			
46	90119–05193	BOLT, WITH WASHER	1	1	1			
47	3JJ–28446–A1	LABEL, CAUTION	1	1	1			
48	3JJ–28446–B1	LABEL, CAUTION			1			

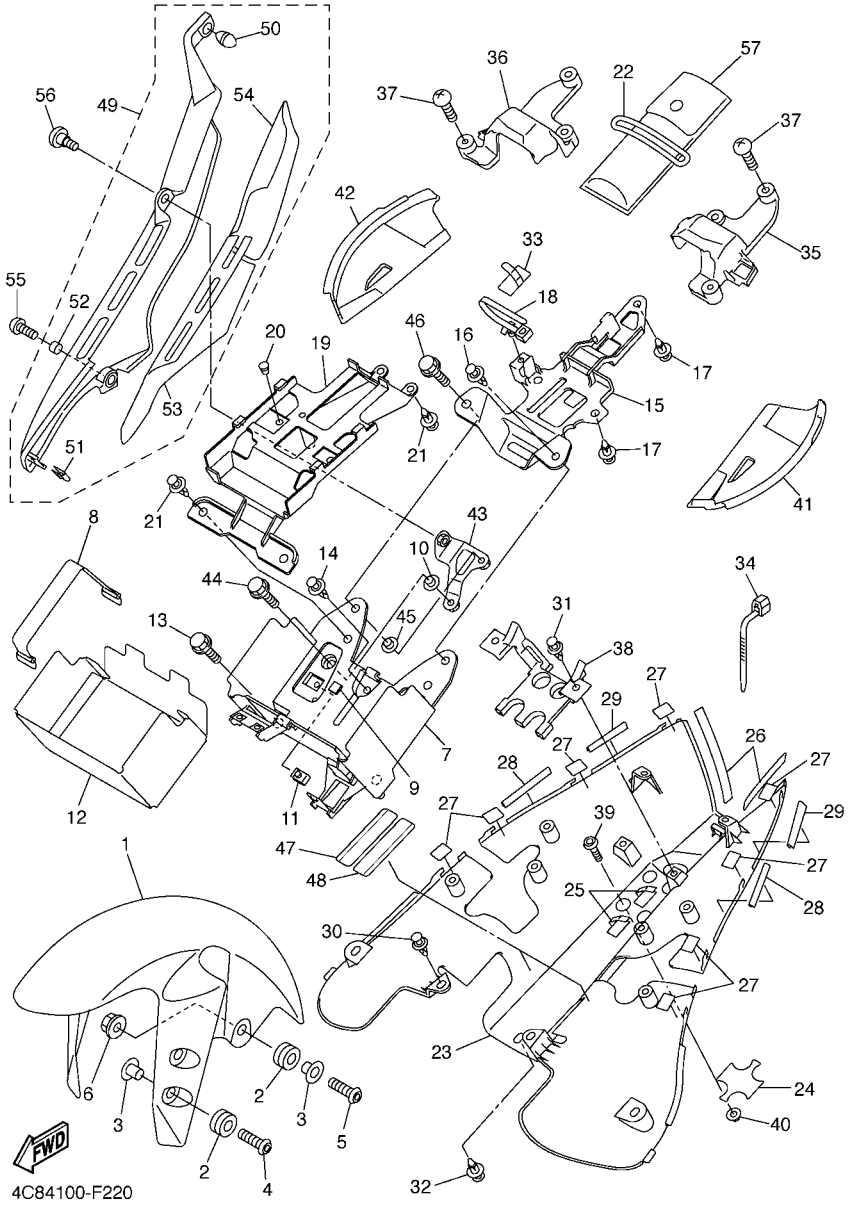

FIG. 22 FENDER

REF. NO.	PART NO.	DESCRIPTION	4C8B	4C8C	4C8D			REMARKS
49	4C8–27406–00	COVER ASSY	1	1	1			
50	5VY–14757–00	.DAMPER, MUFFLER 2	1	1	1			
51	5GM–28379–00	.HOOK	1	1	1			
52	90560–05N33	.SPACER	1	1	1			
53	4C8–27498–00	.SEAT 1	1	1	1			
54	4C8–27499–00	.SEAT 2	1	1	1			
55	92017–05012	BOLT, BUTTON HEAD	1	1	1			
56	90111–05011	BOLT,HEX. SOCKET BUTTON	1	1	1			
57	4C8–28100–00	TOOL KIT	1	1	1			

FIG. 23 SIDE COVER

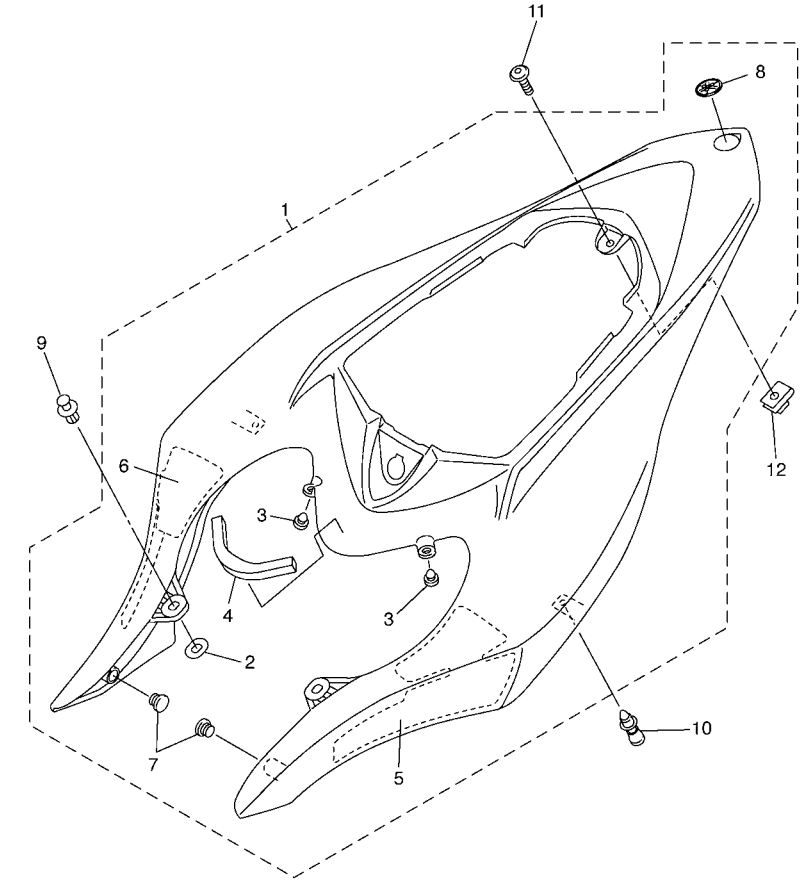

4C84100-F230

REF. NO.	PART NO.	DESCRIPTION	4C8B	4C8C	4C8D			REMARKS
1	4C8–21710–00–P0	SIDE COVER ASSY 1	1	1	1			UR FOR DPBMC
	4C8–21710–00–P1	SIDE COVER ASSY 1	1	1	1			UR FOR SMX
	4C8–21710–00–P3	SIDE COVER ASSY 1	1	1				UR FOR DRMK
	4C8–21710–00–P2	SIDE COVER ASSY 1			1			UR FOR BWC1
2	5PW–2174X–00	.DAMPER	2	2	2			
3	90338–06018	.PLUG	2	2	2			
4	4C8–21747–00	.DAMPER	1	1	1			
5	4C8–2172P–00	.SEAT	1	1	1			
6	4C8–2173P–00	.SEAT	1	1	1			
7	90338–08236	.PLUG	2	2	2			
8	4KN–2836B–00	.TUNING FORK MARK	1	1	1			
9	90269–07076	RIVET	2	2	2			
10	90269–06011	RIVET	2	2	2			
11	90111–05007	BOLT,HEX. SOCKET BUTTON	1	1	1			
12	90183–05076	NUT, SPRING	1	1	1			

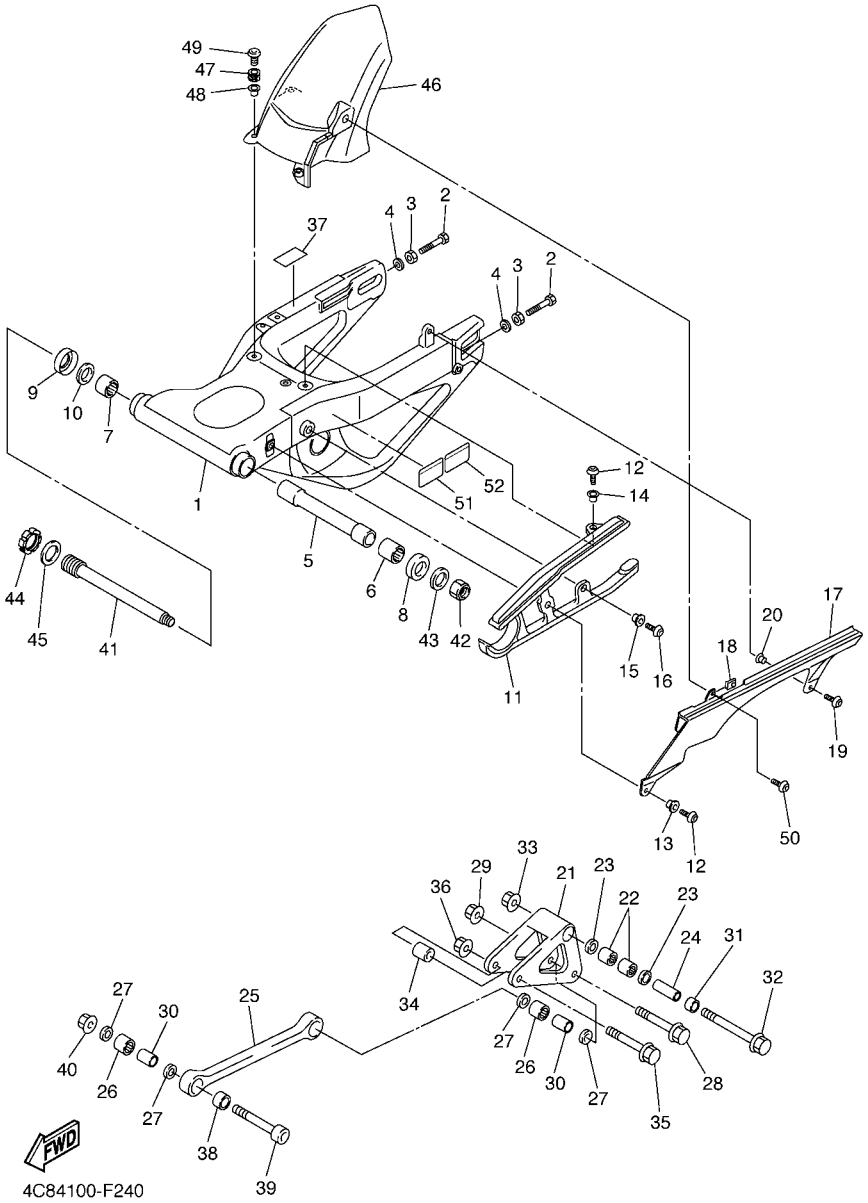

FIG. 24 REAR ARM

REF. NO.	PART NO.	DESCRIPTION	4C8B	4C8C	4C8D			REMARKS
1	4C8–22110–10	REAR ARM COMP.	1	1	1			
2	90101–08013	BOLT	2	2	2			
3	95302–08600	NUT	2	2	2			
4	90201–08057	WASHER, PLATE	2	2	2			
5	4C8–22184–00	BUSH	1	1	1			
6	93317–52865	BEARING	1	1	1			
7	93317–428U8	BEARING	1	1	1			
8	5VY–22128–00	COVER, THRUST 1	1	1	1			
9	4C8–22128–00	COVER, THRUST 1	1	1	1			
10	90201–22019	WASHER, PLATE	1	1	1			
11	4C8–22151–00	SEAL, GUARD	1	1	1			
12	92012–06016	BOLT, BUTTON HEAD	2	2	2			
13	90387–062X0	COLLAR	1	1	1			
14	90387–06066	COLLAR	1	1	1			
15	90560–06244	SPACER	1	1	1			
16	90111–06019	BOLT,HEX. SOCKET BUTTON	1	1	1			
17	5VY–22311–01	CASE, CHAIN	1	1	1			
18	90183–05076	NUT, SPRING	1	1	1			
19	90149–06298	SCREW	1	1	1			
20	90387–07717	COLLAR	1	1	1			
21	4C8–2217A–00	ARM, RELAY	1	1	1			
22	93315–31758	BEARING	2	2	2			
23	93109–17071	OIL SEAL	2	2	2			
24	90387–1012B	COLLAR	1	1	1			
25	4C8–2217M–00	ARM 1	1	1	1			
26	93315–31758	BEARING	2	2	2			
27	93109–17071	OIL SEAL	4	4	4			

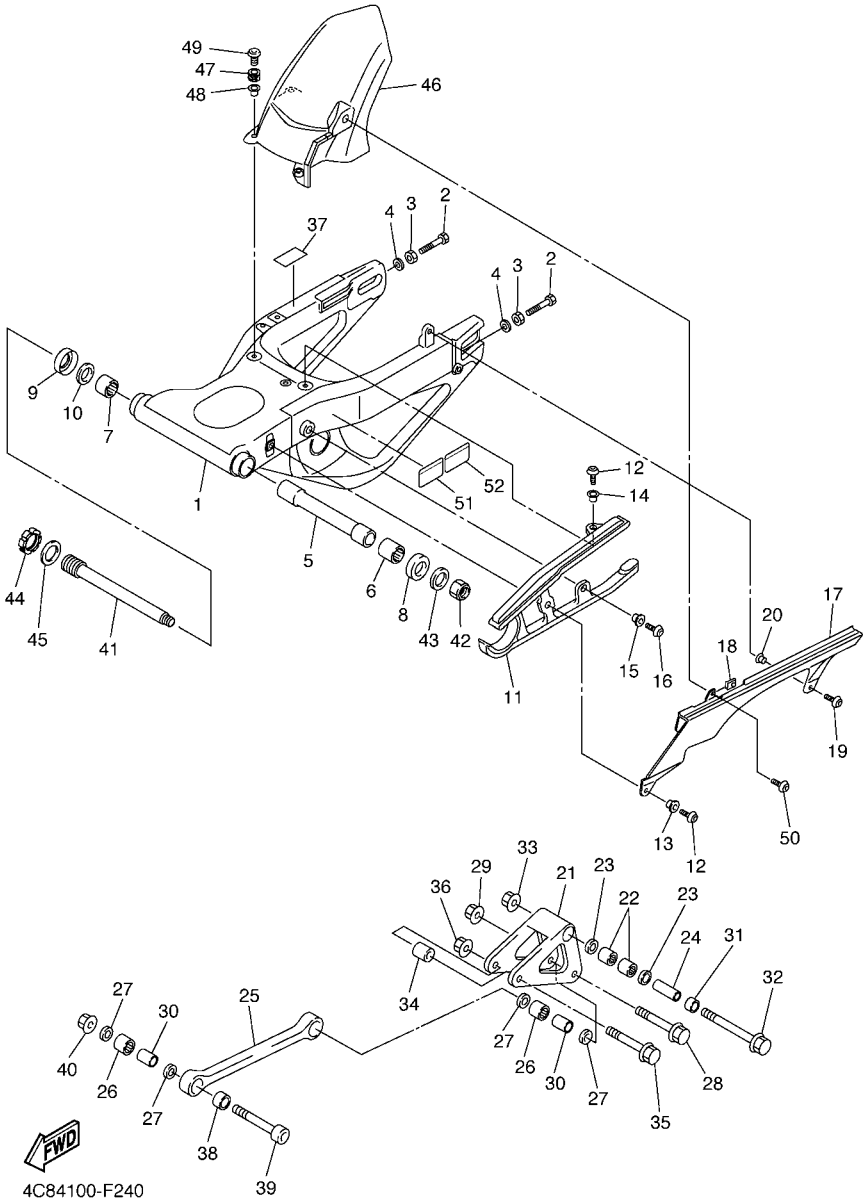

FIG. 24 REAR ARM

REF. NO.	PART NO.	DESCRIPTION	4C8B	4C8C	4C8D			REMARKS
28	90105–10017	BOLT, FLANGE	1	1	1			
29	95602–10200	NUT, U FLANGE	1	1	1			
30	90387–1012A	COLLAR	2	2	2			
31	90387–1013U	COLLAR	1	1	1			
32	90105–10021	BOLT, FLANGE	1	1	1			
33	95602–10200	NUT, U FLANGE	1	1	1			
34	90387–1012A	COLLAR	1	1	1			
35	90105–10017	BOLT, FLANGE	1	1	1			
36	95602–10200	NUT, U FLANGE	1	1	1			
37	2C0–21566–00	TAPE, 1	1	1	1			
38	90387–1013U	COLLAR	1	1	1			
39	90110–10011	BOLT, HEXAGON SOCKET HEAD	1	1	1			
40	95602–10200	NUT, U FLANGE	1	1	1			
41	4C8–22141–00	SHAFT, PIVOT	1	1	1			
42	90185–20008	NUT, SELF-LOCKING	1	1	1			
43	90201–20026	WASHER, PLATE	1	1	1			
44	4C8–22252–00	NUT	1	1	1			
45	90201–30016	WASHER, PLATE	1	1	1			
46	4C8–21650–00	REAR FENDER COMP.	1	1	1			
47	90480–12005	GROMMET	3	3	3			
48	90387–06057	COLLAR	3	3	3			
49	90149–06302	SCREW	3	3	3			
50	90111–05002	BOLT,HEX. SOCKET BUTTON	1	1	1			
51	5VY–21668–00	LABEL, TIRE	1	1	1			
52	5VY–21668–10	LABEL, TIRE			1			

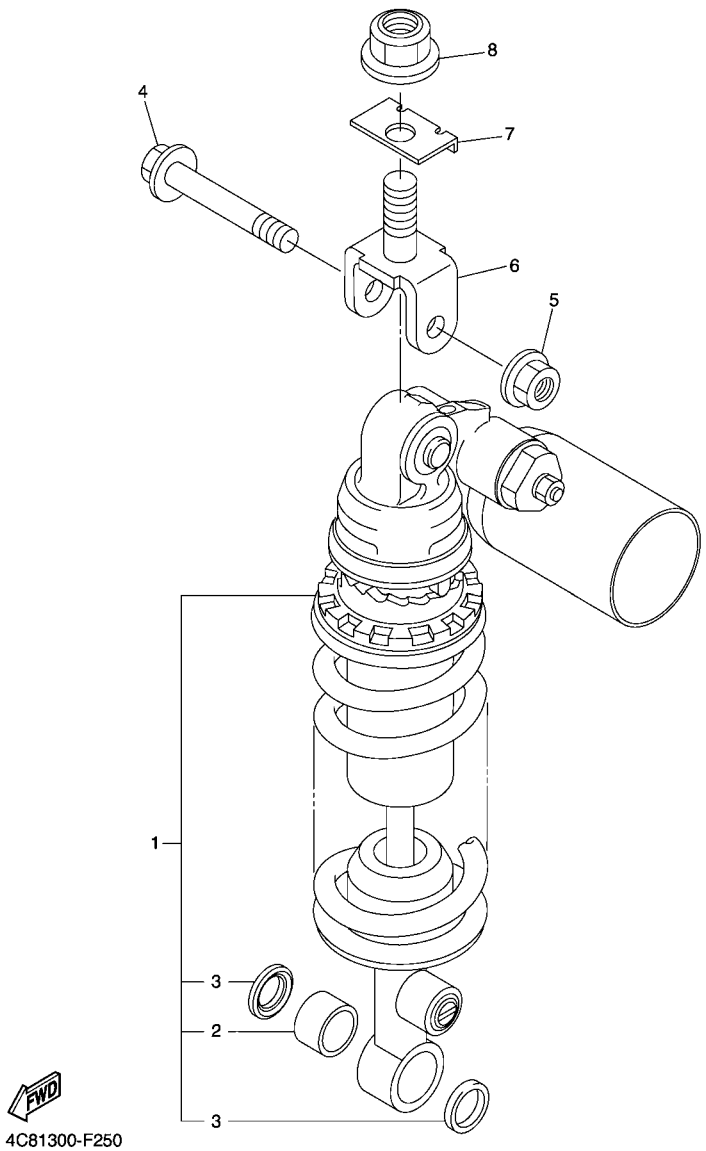

FIG. 25 REAR SUSPENSION

REF. NO.	PART NO.	DESCRIPTION	4C8B	4C8C	4C8D			REMARKS
1	4C8–22210–40	SHOCK ABSORBER ASSY, REAR	1	1				UR FOR DPBMC
	4C8–22210–70	SHOCK ABSORBER ASSY, REAR	1	1				UR FOR DRMK
	4C8–22210–10	SHOCK ABSORBER ASSY, REAR	1	1				UR FOR SMX
	4C8–22210–50	SHOCK ABSORBER ASSY, REAR			1			UR FOR DPBMC
	4C8–22210–80	SHOCK ABSORBER ASSY, REAR			1			UR FOR BWC1
	4C8–22210–20	SHOCK ABSORBER ASSY, REAR			1			UR FOR SMX
2	93315–31758	.BEARING	1	1	1			
3	93109–17071	.OIL SEAL	2	2	2			
4	90105–10018	BOLT, FLANGE	1	1	1			
5	95602–10200	NUT, U FLANGE	1	1	1			
6	4C8–22219–00	BRACKET, UPPER	1	1	1			
7	4C8–22127–00	SHIM	1	1	1			
8	95602–14200	NUT, SELF-LOCKING	1	1	1			

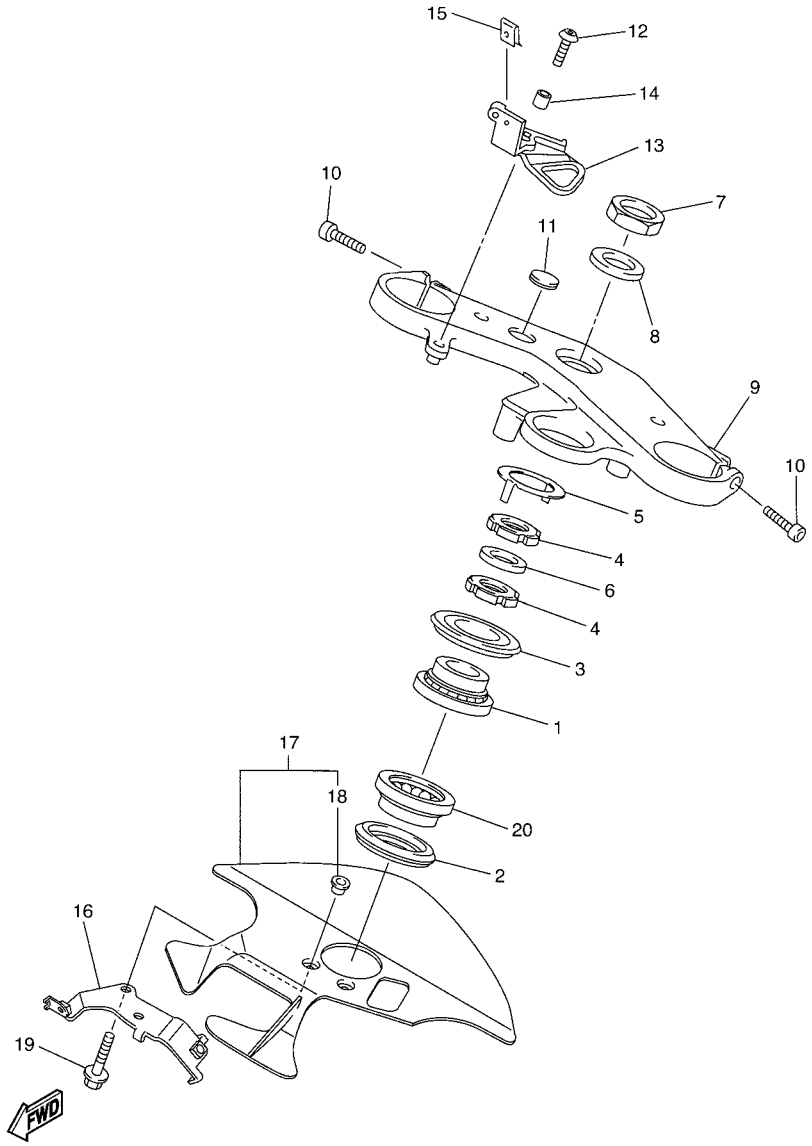

4C88300-G260

FIG. 26 STEERING

REF. NO.	PART NO.	DESCRIPTION	4C8B	4C8C	4C8D			REMARKS
1	93399–99932	BEARING	1	1	1			
2	3FV–23462–00	SEAL, STEERING	1	1	1			
3	4XV–23415–01	COVER, BALL RACE 1	1	1	1			
4	90179–30691	NUT	2	2	2			
5	4XV–23418–00	WASHER, SPECIAL	1	1	1			
6	90202–30235	WASHER, PLATE	1	1	1			
7	90170–28419	NUT	1	1	1			
8	90201–281U8	WASHER, PLATE	1	1	1			
9	4C8–23435–10	CROWN, HANDLE	1	1				
	4C8–23435–00	CROWN, HANDLE			1			
10	91314–08030	BOLT	2	2	2			
11	4XV–2341B–00	EMBLEM	1	1	1			
12	90111–06041	BOLT,HEX. SOCKET BUTTON	1	1	1			
13	5VY–26292–11	STAY	1	1	1			
14	90387–06057	COLLAR	1	1	1			
15	90183–050A0	NUT, SPRING	1	1	1			
16	4C8–23377–00	BRACKET, HORN	1	1	1			
17	4C8–23808–00	STRG, COVER. ASSY	1	1	1			
18	90560–06244	.SPACER	2	2	2			
19	90109–065G4	BOLT	2	2	2			
20	93399–99957	BEARING	1	1	1			

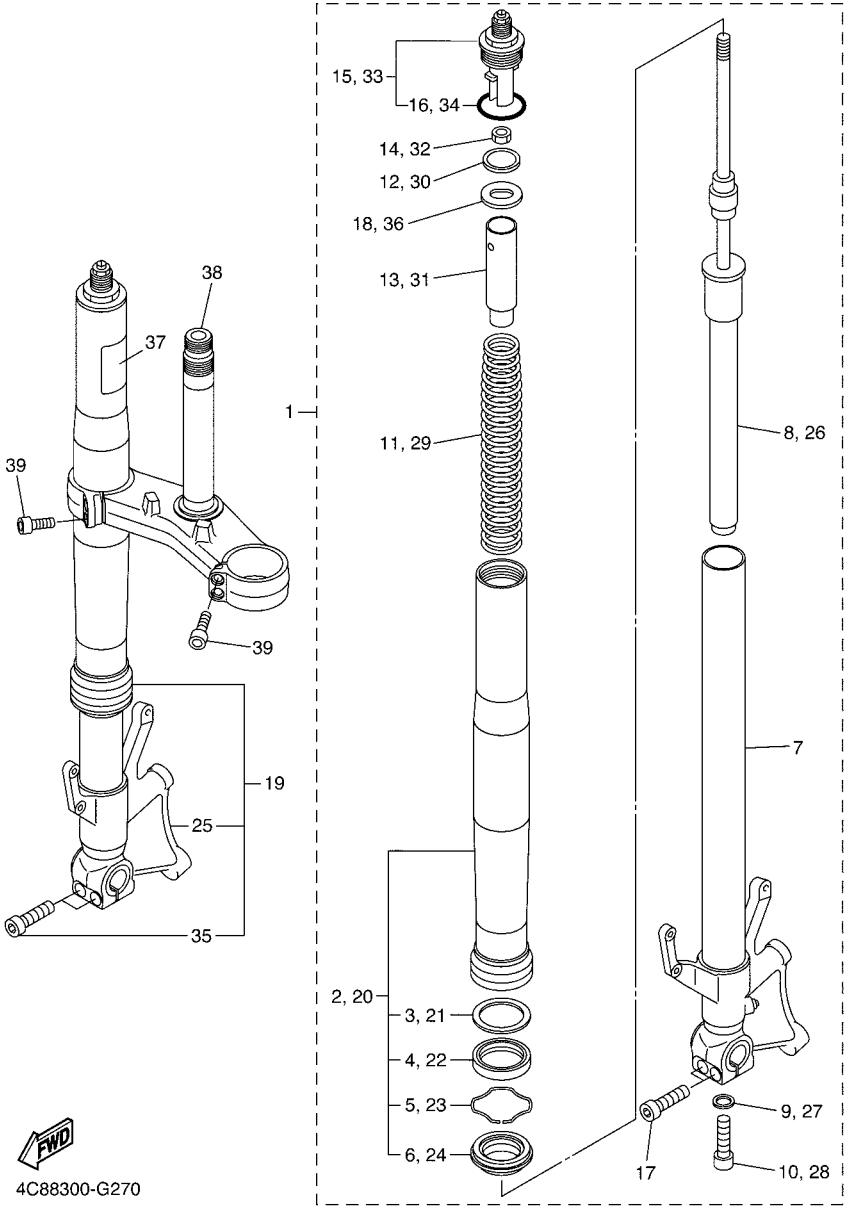

FIG. 27 FRONT FORK

REF. NO.	PART NO.	DESCRIPTION	4C8B	4C8C	4C8D			REMARKS
1	4C8–23102–00	FRONT FORK ASSY (L.H)	1	1				
	4C8–23102–00	FRONT FORK ASSY (L.H)			1			UR FOR DPBMC,SMX
	4C8–23102–10	FRONT FORK ASSY (L.H)			1			UR FOR BWC1
2	4C8–23136–00	.TUBE, OUTER	1	1				
	4C8–23136–00	.TUBE, OUTER			1			UR FOR DPBMC,SMX
	4C8–23136–10	.TUBE, OUTER			1			UR FOR BWC1
3	5PW–23146–00	..WASHER, OIL SEAL	1	1	1			
4	4PU–23145–01	..OIL SEAL	1	1	1			
5	4V4–23153–L0	..RING, SNAP	1	1	1			
6	4PU–23144–00	..SEAL, DUST	1	1	1			
7	4C8–23110–00	.INNER TUBE COMP.1	1	1	1			
8	4C8–23170–00	.CYLINDER COMP., FRONT FORK	1	1	1			
9	509–23158–L0	.GASKET	1	1	1			
10	5UX–23181–00	.BOLT, HEXAGON SOCKET HEAD	1	1	1			
11	4C8–23141–00	.SPRING, FRONT FORK	1	1	1			
12	5VY–12277–00	.WASHER	1	1	1			
13	5VY–23118–00	.SPACER	1	1	1			
14	3SP–23357–L0	.NUT	1	1	1			
15	4C8–23111–00	.BOLT, CAP	1	1	1			
16	3XJ–23147–L0	..O-RING	1	1	1			
17	91314–08040	.BOLT	2	2	2			
18	4C8–23149–00	.WASHER, SPRING UPPER	1	1	1			
19	4C8–23103–00	FRONT FORK ASSY (R.H)	1	1				
	4C8–23103–00	FRONT FORK ASSY (R.H)			1			UR FOR DPBMC,SMX
	4C8–23103–10	FRONT FORK ASSY (R.H)			1			UR FOR BWC1
20	4C8–23136–00	.TUBE, OUTER	1	1				
	4C8–23136–00	.TUBE, OUTER			1			UR FOR DPBMC,SMX

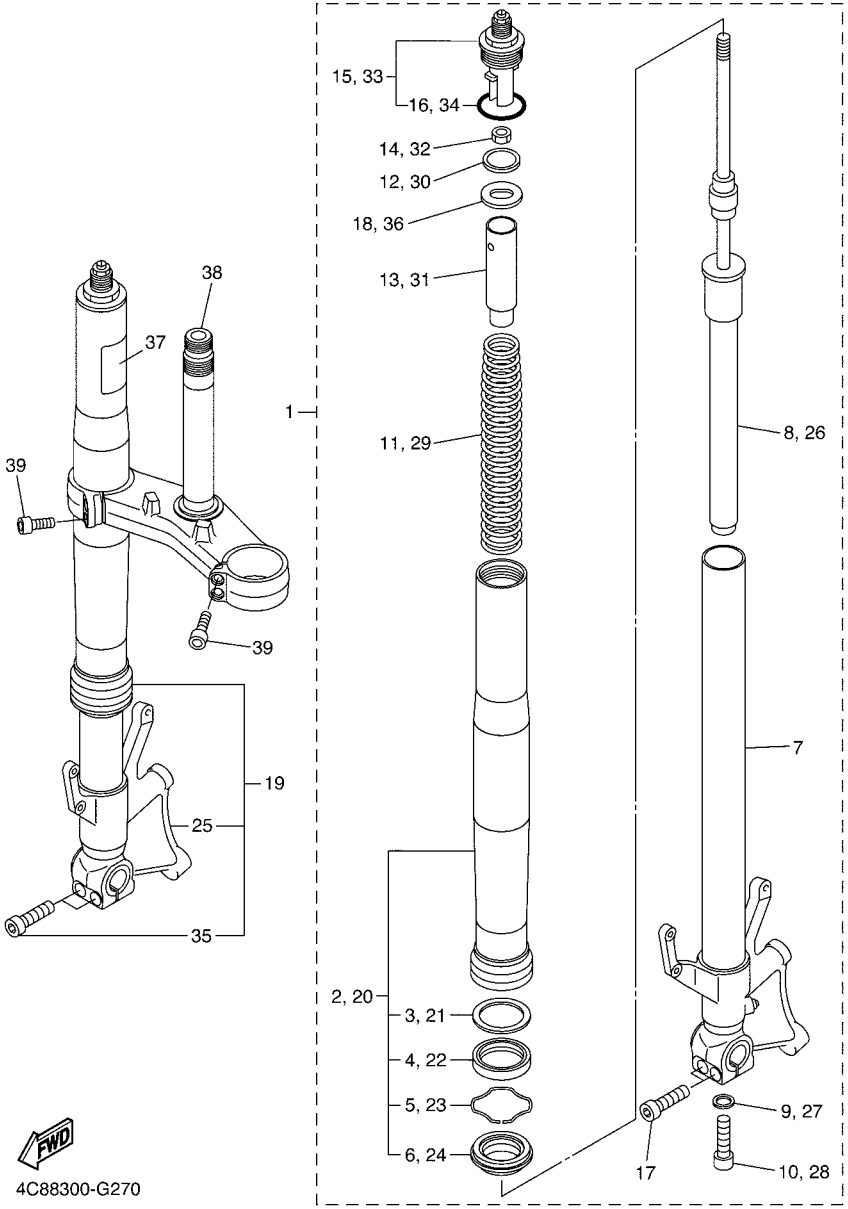

FIG. 27 FRONT FORK

REF. NO.	PART NO.	DESCRIPTION	4C8B	4C8C	4C8D			REMARKS
20	4C8–23136–10	.TUBE, OUTER			1			UR FOR BWC1
21	5PW–23146–00	..WASHER, OIL SEAL	1	1	1			
22	4PU–23145–01	..OIL SEAL	1	1	1			
23	4V4–23153–L0	..RING, SNAP	1	1	1			
24	4PU–23144–00	..SEAL, DUST	1	1	1			
25	4C8–23120–00	.INNER TUBE COMP.2	1	1	1			
26	4C8–23170–00	.CYLINDER COMP., FRONT FORK	1	1	1			
27	509–23158–L0	.GASKET	1	1	1			
28	5UX–23181–00	.BOLT, HEXAGON SOCKET HEAD	1	1	1			
29	4C8–23141–00	.SPRING, FRONT FORK	1	1	1			
30	5VY–12277–00	.WASHER	1	1	1			
31	5VY–23118–00	.SPACER	1	1	1			
32	3SP–23357–L0	.NUT	1	1	1			
33	4C8–23111–00	.BOLT, CAP	1	1	1			
34	3XJ–23147–L0	..O-RING	1	1	1			
35	91314–08040	.BOLT	2	2	2			
36	4C8–23149–00	.WASHER, SPRING UPPER	1	1	1			
37	5PW–23472–00	PROTECTOR	1	1	1			
38	4C8–23340–00	UNDER BRACKET COMP.	1	1	1			
39	91314–08030	BOLT	4	4	4			

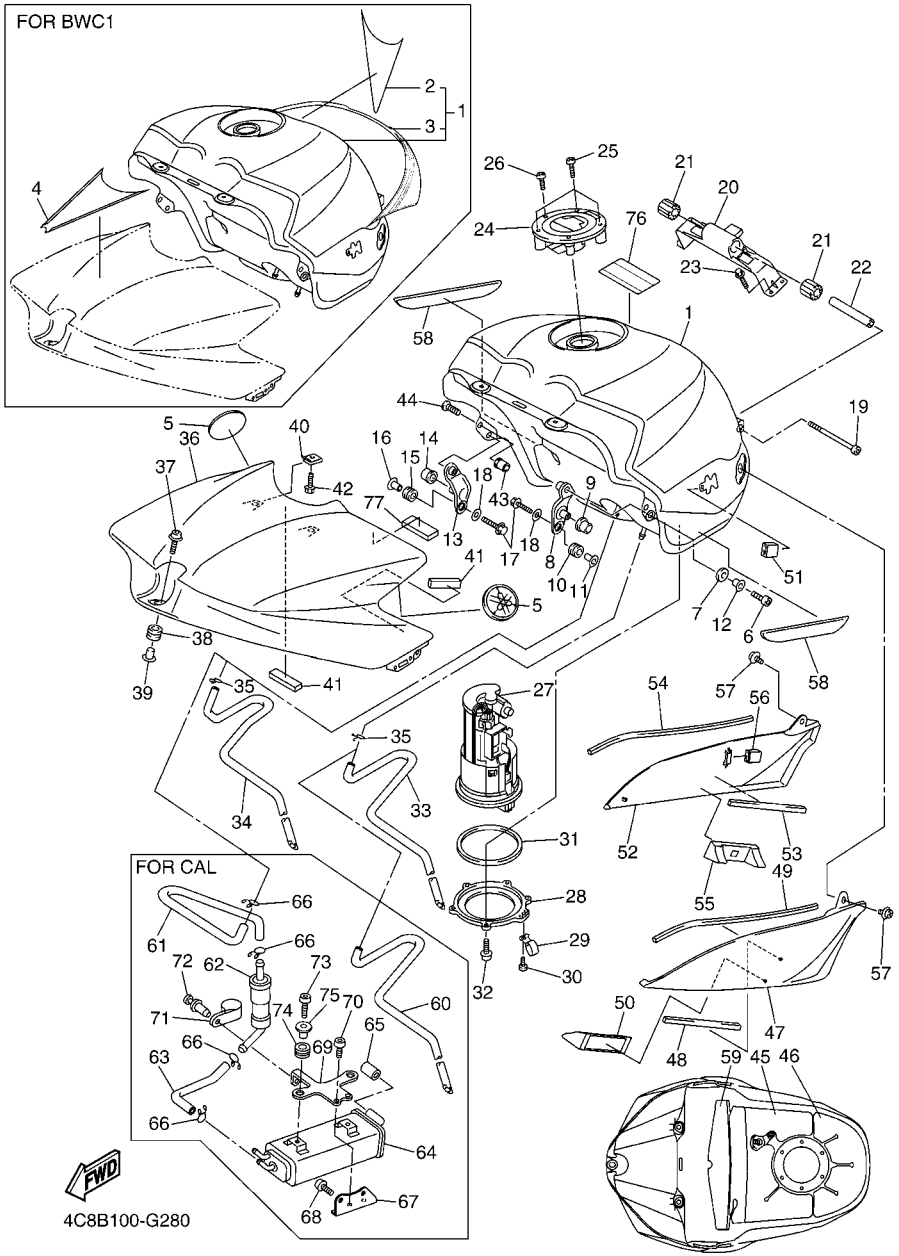

FIG. 28 FUEL TANK

REF. NO.	PART NO.	DESCRIPTION	4C8B	4C8C	4C8D			REMARKS
1	4C8–YK241–00–P0	FUEL TANK COMP.	1	1	1			UR FOR DPBMC
	4C8–YK241–00–P1	FUEL TANK COMP.	1	1	1			UR FOR SMX
	4C8–YK241–00–P3	FUEL TANK COMP.	1	1				UR FOR DRMK
	4C8–Y2410–00–03	FUEL TANK COMP.			1			UR FOR BWC1
2	4C8–24245–20	.GRAPHIC, FUEL TANK 2			1			FOR BWC1
3	4C8–24245–10	.GRAPHIC, FUEL TANK 2			1			FOR BWC1
4	4C8–24244–20	GRAPHIC, FUEL TANK 1			1			FOR BWC1
5	5SL–2413B–00	EMBLEM	2	2	2			
6	91312–06016	BOLT	2	2	2			
7	5VY–24183–00	DAMPER, LOCATING 3	2	2	2			
8	5VY–24191–00	BRACKET, FUEL TANK 1	1	1	1			
9	5VY–24181–00	DAMPER, LOCATING 1	1	1	1			
10	90480–10542	GROMMET	1	1	1			
11	90387–066Y6	COLLAR	1	1	1			
12	90387–061U9	COLLAR	2	2	2			
13	5VY–24192–00	BRACKET, FUEL TANK 2	1	1	1			
14	5VY–24181–00	DAMPER, LOCATING 1	1	1	1			
15	90480–10542	GROMMET	1	1	1			
16	90387–066Y6	COLLAR	1	1	1			
17	95022–06030	BOLT, FLANGE	2	2	2			
18	90201–06095	WASHER, PLATE	2	2	2			
19	91312–06090	BOLT	1	1	1			
20	4C8–2413Y–00	BRACKET, TANK FITTING	1	1	1			
21	5SL–24183–00	DAMPER, LOCATING 3	2	2	2			
22	90387–06055	COLLAR	1	1	1			
23	95022–06020	BOLT, FLANGE	4	4	4			
24	5JJ–24602–00	CAP ASSY	1	1	1			

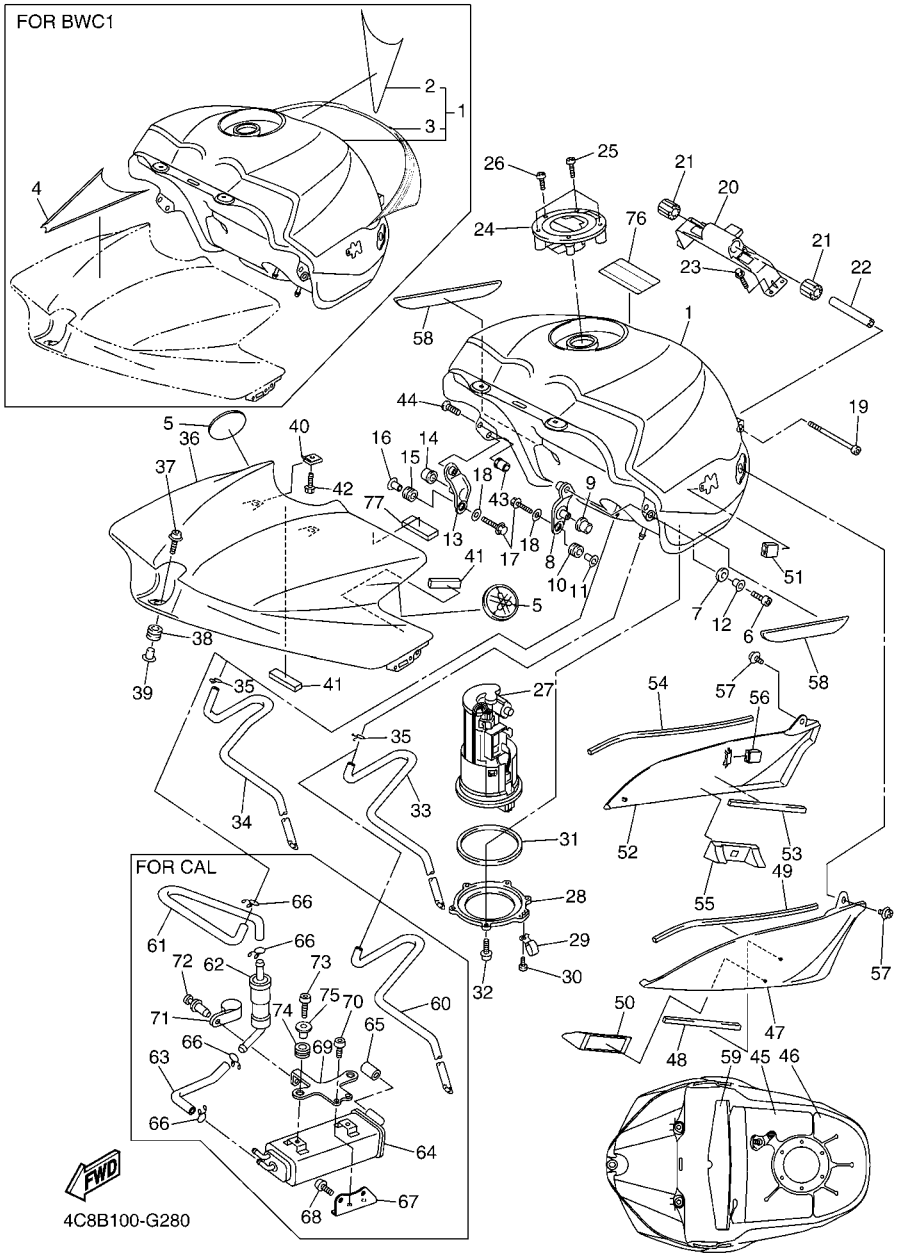

FIG. 28 FUEL TANK

REF. NO.	PART NO.	DESCRIPTION	4C8B	4C8C	4C8D			REMARKS
25	90110–05112	BOLT, HEXAGON SOCKET HEAD	3	3	3			
26	91317–05010	BOLT	1	1	1			
27	4C8–13907–00	FUEL PUMP COMP.	1	1	1			
28	4C8–24491–00	BRACKET, FUEL PUMP	1	1	1			
29	90461–08003	CLAMP	1	1	1			
30	90154–05012	SCREW, BINDING	1	1	1			
31	5JW–24486–00	O-RING	1	1	1			
32	90110–05014	BOLT, HEXAGON SOCKET HEAD	6	6	6			
33	5VY–24312–00	PIPE 2	1		1			
34	4C8–24316–00	PIPE 6	1		1			
35	90467–09006	CLIP	2	2	2			
36	4C8–2171A–00–P0	COVER, TOP	1	1	1			UR FOR DPBMC
	4C8–2171A–00–P5	COVER, TOP	1	1	1			UR MBL2 FOR SMX
	4C8–2171A–00–P6	COVER, TOP	1	1				UR MRM1 FOR DRMK
	4C8–2171A–00–P2	COVER, TOP			1			UR FOR BWC1
37	90110–06233	BOLT, HEXAGON SOCKET HEAD	1	1	1			
38	90480–12314	GROMMET	1	1	1			
39	90387–06194	COLLAR	1	1	1			
40	90183–05074	NUT, SPRING	2	2	2			
41	4C8–24182–00	DAMPER, LOCATING 2	3	3	3			
42	90105–05002	BOLT, FLANGE	2	2	2			
43	90179–05523	NUT	2	2	2			
44	98907–05014	SCREW, BIND	2	2	2			
45	5VY–2414N–00	DAMPER, PLATE 4	1	1	1			
46	5VY–2414P–00	DAMPER, PLATE 5	1	1	1			
47	4C8–24129–00	COVER, SIDE 1	1	1	1			
48	4C8–2414J–00	DAMPER, PLATE 2	1	1	1			

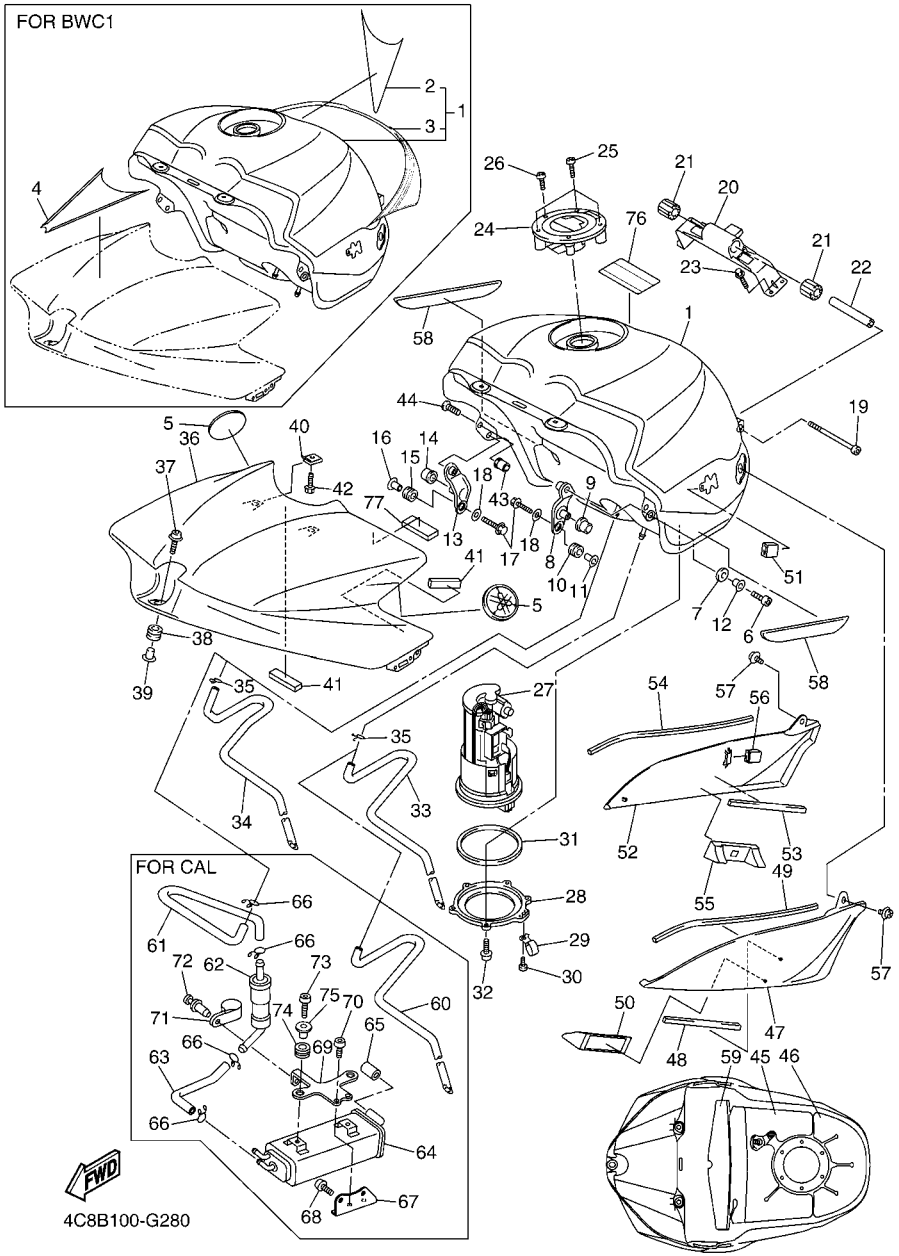

FIG. 28 FUEL TANK

REF. NO.	PART NO.	DESCRIPTION	4C8B	4C8C	4C8D			REMARKS
49	4C8–2414H–00	DAMPER, PLATE 1	1	1	1			
50	4C8–2414N–00	DAMPER, PLATE 4	1	1	1			
51	5PW–2411J–01	DAMPER, SIDE COVER	1	1	1			
52	4C8–24139–00	COVER, SIDE 2	1	1	1			
53	4C8–2414J–00	DAMPER, PLATE 2	1	1	1			
54	4C8–2414H–00	DAMPER, PLATE 1	1	1	1			
55	4C8–2414P–00	DAMPER, PLATE 5	1	1	1			
56	5PW–2411J–01	DAMPER, SIDE COVER	1	1	1			
57	90159–05015	SCREW, WITH WASHER	2	2	2			
58	4C8–2414K–00	DAMPER, PLATE 3	2	2	2			
59	5VY–2414R–00	DAMPER, PLATE 6	1	1	1			
60	5VY–24312–00	PIPE 2		1				
61	4C8–24313–00	PIPE 3		1				
62	5RB–24180–00	ROLL OVER VALVE ASSY		1				
63	4C8–24314–00	PIPE 4		1				
64	5VY–24170–00	CANISTER ASSY		1				
65	90445–11418	HOSE (L18)		1				
66	90467–09006	CLIP		4				
67	4C8–2419F–00	BRACKET, CANISTOR		1				
68	92012–06016	BOLT, BUTTON HEAD		2				
69	4C8–24216–00	STAY		1				
70	92012–06010	BOLT, BUTTON HEAD		2				
71	90461–15139	CLAMP		1				
72	90269–05001	RIVET		1				
73	92017–06016	BOLT, BUTTON HEAD		2				
74	90480–13018	GROMMET		2				
75	90387–062L2	COLLAR		2				

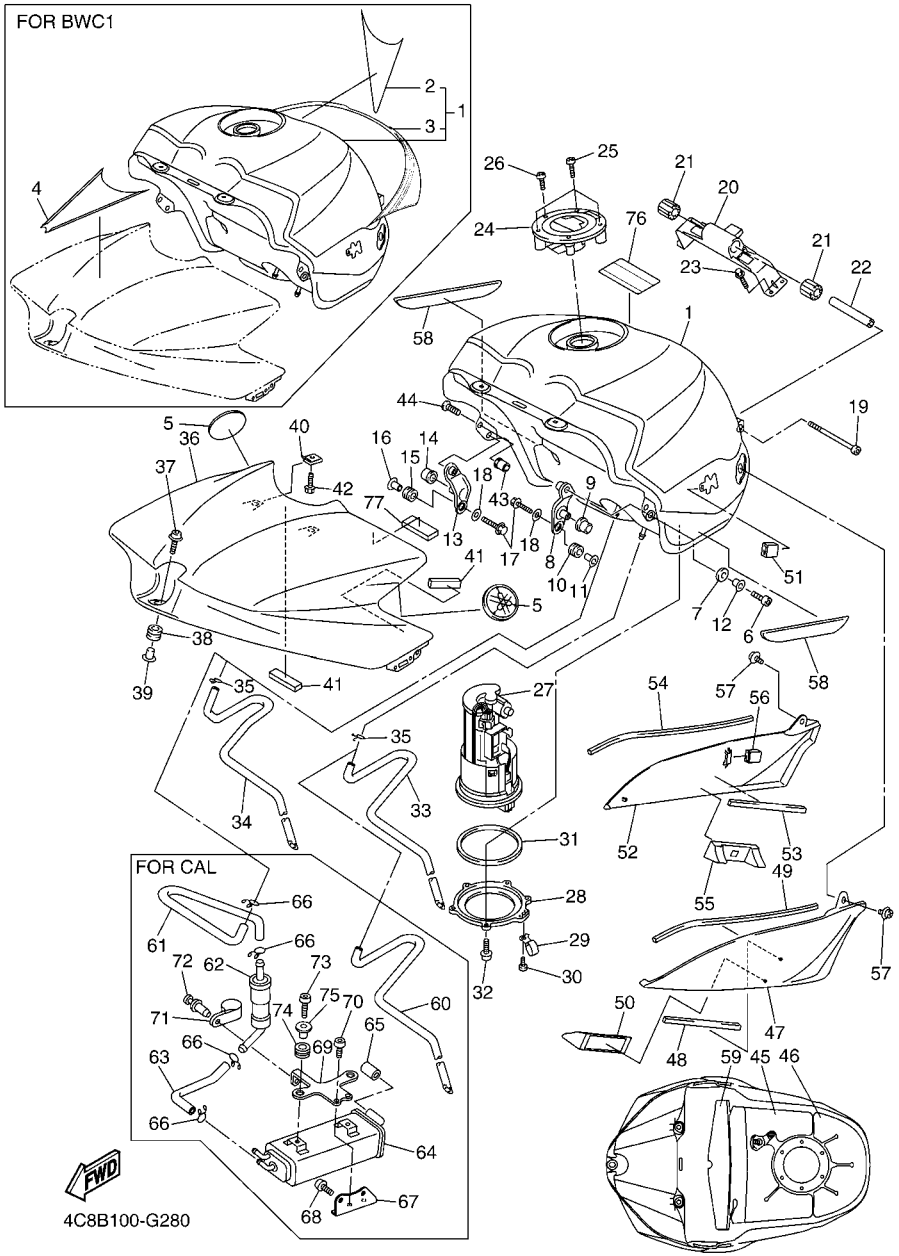

FIG. 28 FUEL TANK

REF. NO.	PART NO.	DESCRIPTION	4C8B	4C8C	4C8D			REMARKS
76	4C8–2118K–00	LABEL, CAUTION	1	1				
	4C8–2118K–10	LABEL, CAUTION			1			
77	4C8–24183–00	DAMPER, LOCATING 3	2	2	2			

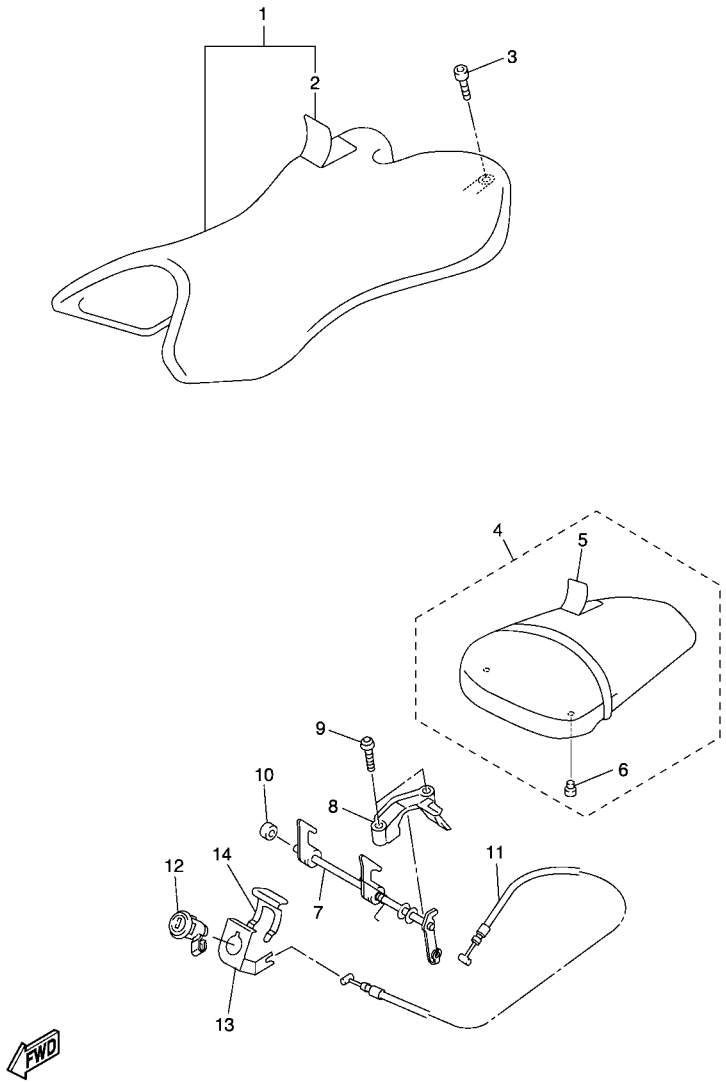

FIG. 29 SEAT

REF. NO.	PART NO.	DESCRIPTION	4C8B	4C8C	4C8D			REMARKS
1	4C8–24710–00	SINGLE SEAT ASSY	1	1				
	4C8–24710–00	SINGLE SEAT ASSY			1			UR FOR DPBMC,SMX
	4C8–24710–10	SINGLE SEAT ASSY			1			UR FOR BWC1
2	4C8–24711–00	.COVER, SINGLE SEAT	1	1				
	4C8–24711–00	.COVER, SINGLE SEAT			1			UR FOR DPBMC,SMX
	4C8–24711–10	.COVER, SINGLE SEAT			1			UR FOR BWC1
3	90110–06258	BOLT, HEXAGON SOCKET HEAD	2	2	2			
4	4C8–24750–00	TANDEM SEAT ASSY	1	1				
	4C8–24750–00	TANDEM SEAT ASSY			1			UR FOR DPBMC,SMX
	4C8–24750–10	TANDEM SEAT ASSY			1			UR FOR BWC1
5	4C8–24751–00	.COVER, TANDEM SEAT	1	1				
	4C8–24751–00	.COVER, TANDEM SEAT			1			UR FOR DPBMC,SMX
	4C8–24751–10	.COVER, TANDEM SEAT			1			UR FOR BWC1
6	5SL–24723–00	.DAMPER, SEAT	2	2	2			
7	5VY–24780–01	SEAT LOCK ASSY	1	1	1			
8	5VY–24792–00	PLATE	1	1	1			
9	92017–06025	BOLT, BUTTON HEAD	2	2	2			
10	5VY–24729–00	SPACER 2	1	1	1			
11	5VY–2478E–00	CABLE, SEAT LOCK	1	1	1			
12	5VY–W2470–00	ROTOR SET	1	1	1			
13	5VY–2117K–01	STAY, LOCK	1	1	1			
14	5VY–2176V–00	SPRING, LOCK 2	1	1	1			

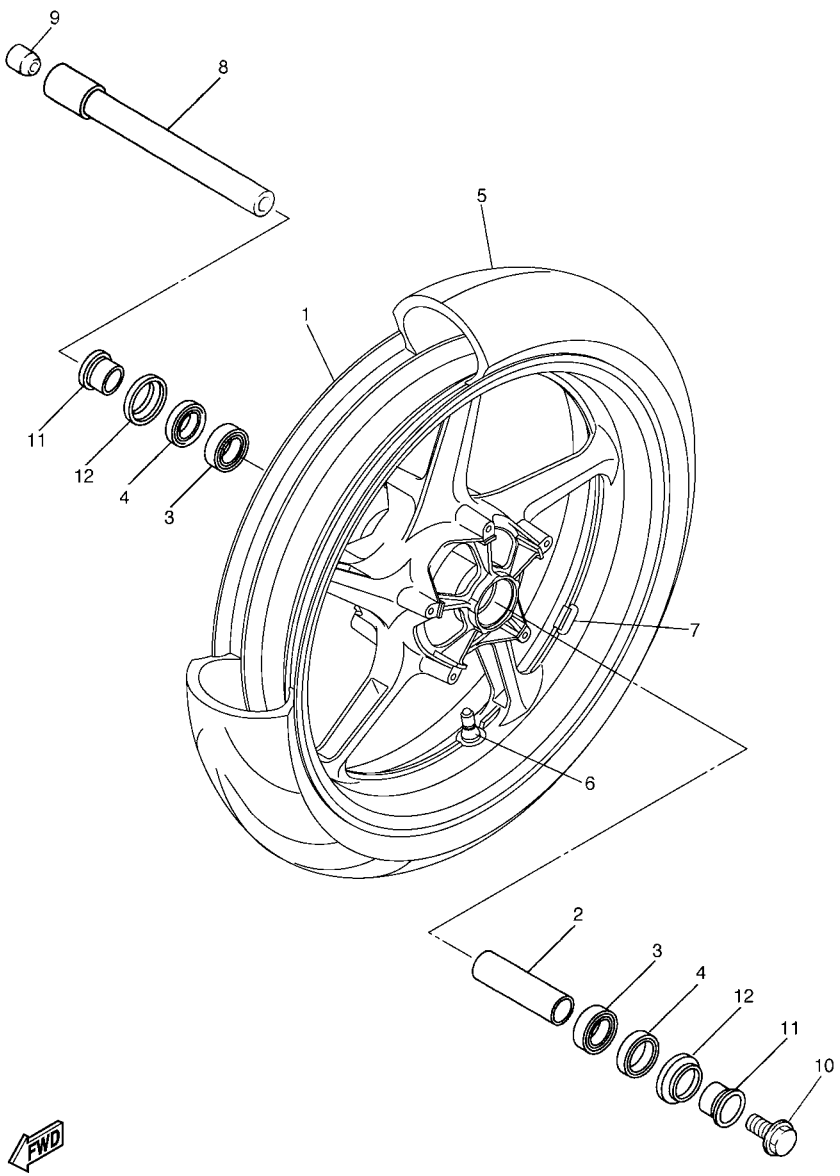

4C81332-F300

FIG. 30 FRONT WHEEL

REF. NO.	PART NO.	DESCRIPTION	4C8B	4C8C	4C8D			REMARKS
1	5VY–25168–00–98	CAST WHEEL, FRONT	1	1	1			LGB FOR DPBMC,SMX
	5VY–25168–00–P2	CAST WHEEL, FRONT	1	1				DNG1 FOR DRMK
	5VY–25168–00–0X	CAST WHEEL, FRONT			1			LGB/HTR FOR BWC1
2	4XV–25117–00	SPACER, BEARING	1	1	1			
3	93306–07208	BEARING	2	2	2			
4	93106–28043	OIL SEAL	2	2	2			
5	*	TIRE(120/70 ZR17 M/C 58W)	1	1	1			UR LM PIRELLI
	*	TIRE(120/70 ZR17M/C 58W PILOT)	1	1	1			UR LM MICHELIN
6	93900–00030	VALVE, RIM (TR412)	1	1	1			TAIHEIYO
7	5MT–25398–00	BALANCER, WHEEL (10G)	1	1	1			UN
	5MT–25398–10	BALANCER, WHEEL (20G)	1	1	1			UN
	5MT–25398–20	BALANCER, WHEEL (30G)	1	1	1			UN
8	2C0–25181–00	AXLE, WHEEL	1	1	1			
9	5PW–25188–00	CAP	1	1	1			
10	90105–14002	BOLT, FLANGE	1	1	1			
11	4XV–25186–00	COLLAR, WHEEL	2	2	2			
12	4XV–25118–00	COVER, HUB DUST	2	2	2			

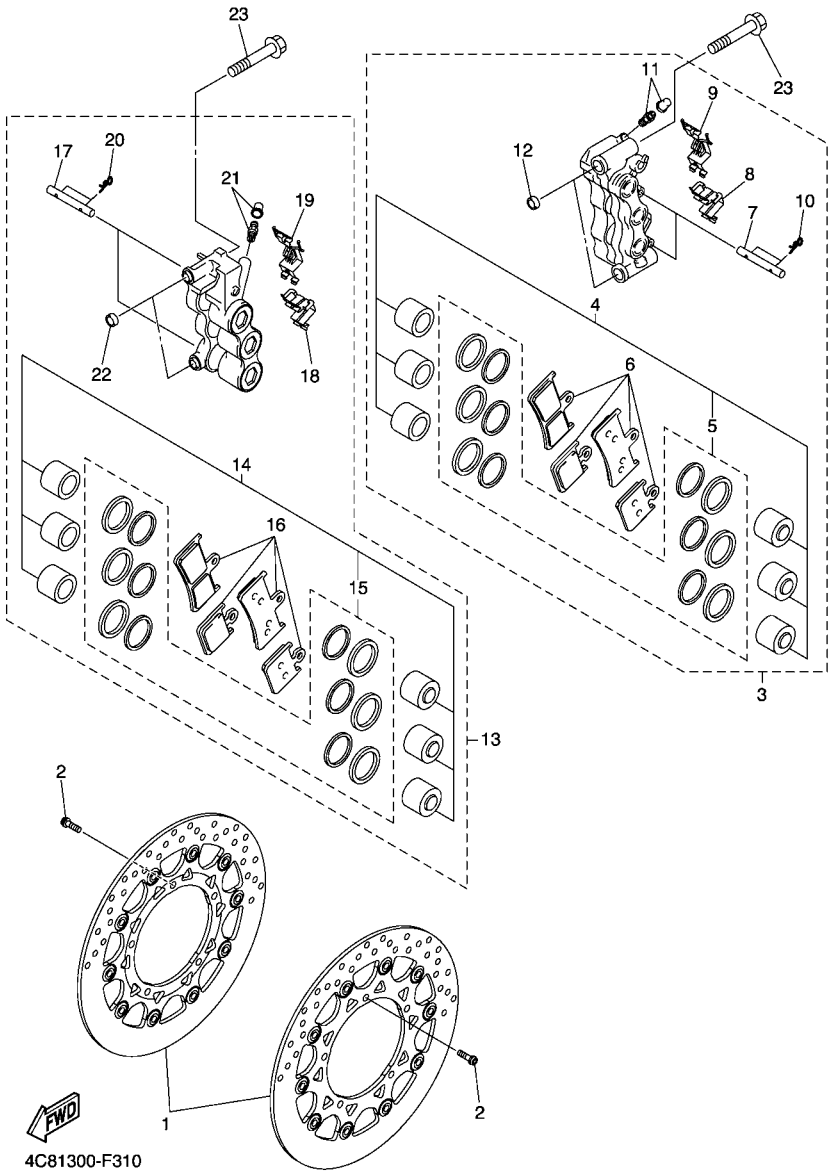

FIG. 31 FRONT BRAKE CALIPER

REF. NO.	PART NO.	DESCRIPTION	4C8B	4C8C	4C8D			REMARKS
1	4C8–2581T–00	DISK BRAKE ASSY	2	2	2			
2	90149–06043	SCREW	10	10	10			
3	4C8–2580T–01	CALIPER ASSY (LEFT)	1	1	1			
4	4C8–W0057–00	.PISTON ASSY, CALIPER	1	1	1			
5	4C8–W0047–00	..CALIPER SEAL KIT	1	1	1			
6	4C8–W0045–00	.BRAKE PAD KIT	1	1	1			
7	4SV–25924–00	.PIN, PAD	2	2	2			
8	4C8–25919–00	.SUPPORT, PAD	1	1	1			
9	4C8–25919–11	.SUPPORT, PAD	1	1	1			
10	3GM–25925–00	.CLIP	4	4	4			
11	1J3–W0048–00	.BLEED SCREW KIT	1	1	1			
12	5VY–2583B–00	.PIN, KNOCK	2	2	2			
13	4C8–2580U–01	CALIPER ASSY (RIGHT)	1	1	1			
14	4C8–W0057–00	.PISTON ASSY, CALIPER	1	1	1			
15	4C8–W0047–00	..CALIPER SEAL KIT	1	1	1			
16	4C8–W0045–00	.BRAKE PAD KIT	1	1	1			
17	4SV–25924–00	.PIN, PAD	2	2	2			
18	4C8–25919–00	.SUPPORT, PAD	1	1	1			
19	4C8–25919–11	.SUPPORT, PAD	1	1	1			
20	3GM–25925–00	.CLIP	4	4	4			
21	1J3–W0048–00	.BLEED SCREW KIT	1	1	1			
22	5VY–2583B–00	.PIN, KNOCK	2	2	2			
23	90401–10012	BOLT, UNION	4	4	4			

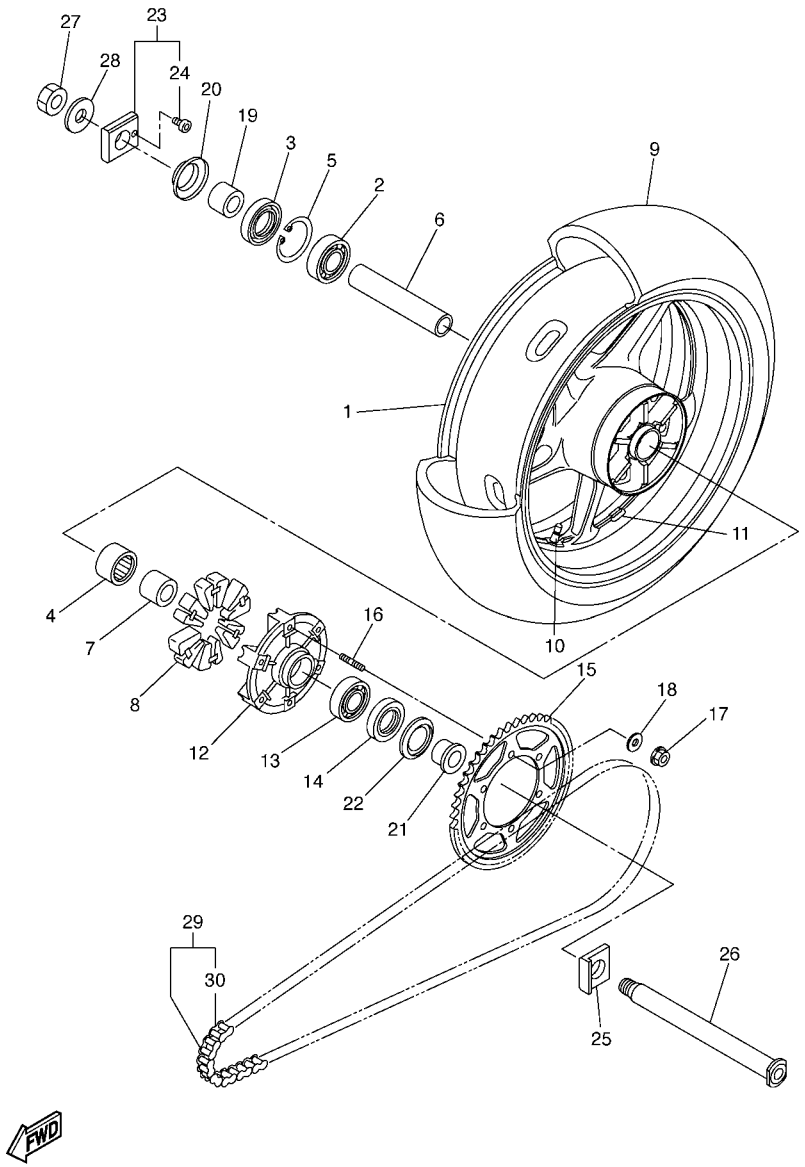

4C81332-F320

FIG. 32 REAR WHEEL

REF. NO.	PART NO.	DESCRIPTION	4C8B	4C8C	4C8D			REMARKS
1	5VY–25338–00–98	CAST WHEEL, REAR	1	1	1			LGB FOR DPBMC,SMX
	5VY–25338–00–P2	CAST WHEEL, REAR	1	1				DNG1 FOR DRMK
	5VY–25338–00–0X	CAST WHEEL, REAR			1			LGB/HTR FOR BWC1
2	93306–20531	BEARING	1	1	1			
3	93106–40013	OIL SEAL	1	1	1			
4	93317–43580	BEARING	1	1	1			
5	93420–61M07	CIRCLIP	1	1	1			
6	5PW–25317–00	SPACER, BEARING	1	1	1			
7	4XV–25383–00	COLLAR, WHEEL	1	1	1			
8	2C0–25364–00	DAMPER	6	6	6			
9	*	TIRE (190/50 ZR17 M/C 73W)	1	1	1			UR LM PIRELLI
	*	TIRE(190/50 ZR17M/C 73W PILOT)	1	1	1			UR LM MICHELIN
10	93900–00030	VALVE, RIM (TR412)	1	1	1			TAIHEIYO
11	5MT–25398–00	BALANCER, WHEEL (10G)	1	1	1			UN
	5MT–25398–10	BALANCER, WHEEL (20G)	1	1	1			UN
	5MT–25398–20	BALANCER, WHEEL (30G)	1	1	1			UN
12	5SL–25366–00	CLUTCH, HUB	1	1	1			
13	93306–20531	BEARING	1	1	1			
14	93106–40013	OIL SEAL	1	1	1			
15	5VY–25445–20	SPROCKET, DRIVEN (45T)	1	1	1			
16	90116–10485	BOLT, STUD	6	6	6			
17	90185–10009	NUT, SELF-LOCKING	6	6	6			
18	90201–10021	WASHER, PLATE	6	6	6			
19	5PW–25377–00	COLLAR, WHEEL	1	1	1			
20	5PW–25367–00	COVER, HUB DUST	1	1	1			
21	5SL–25376–00	COLLAR, WHEEL	1	1	1			
22	5SL–25367–00	COVER, HUB DUST	1	1	1			

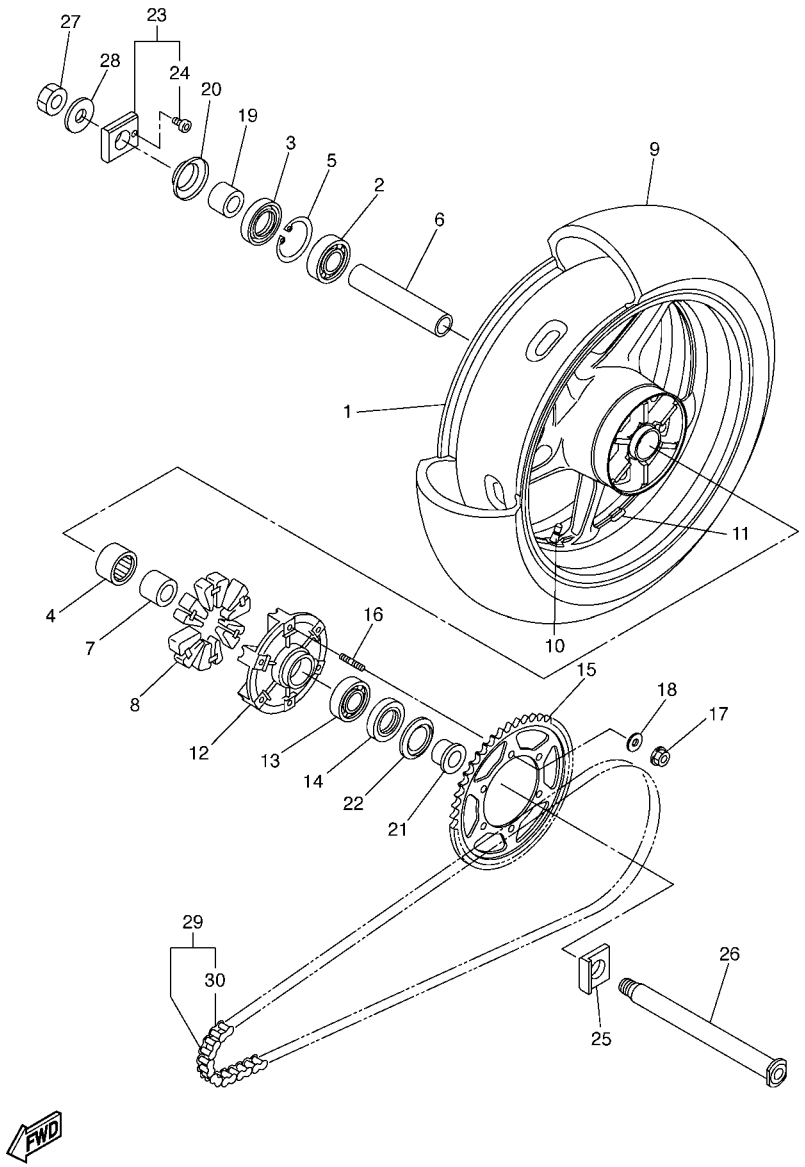

FIG. 32 REAR WHEEL

REF. NO.	PART NO.	DESCRIPTION	4C8B	4C8C	4C8D			REMARKS
23	4C8–25388–00	PULLER, CHAIN 1	1	1	1			
24	90110–05030	.BOLT, HEXAGON SOCKET HEAD	1	1	1			
25	5VY–25389–00	PULLER, CHAIN 2	1	1	1			
26	4C8–25381–00	AXLE, WHEEL	1	1	1			
27	90185–24007	NUT, SELF-LOCKING	1	1	1			
28	90201–25020	WASHER, PLATE	1	1	1			
29	94582–10118	CHAIN (DID50VA8-118LL)	1	1	1			
30	94682–05031	.JOINT, CHAIN (DID 50VA8-ZJ)	1	1	1			

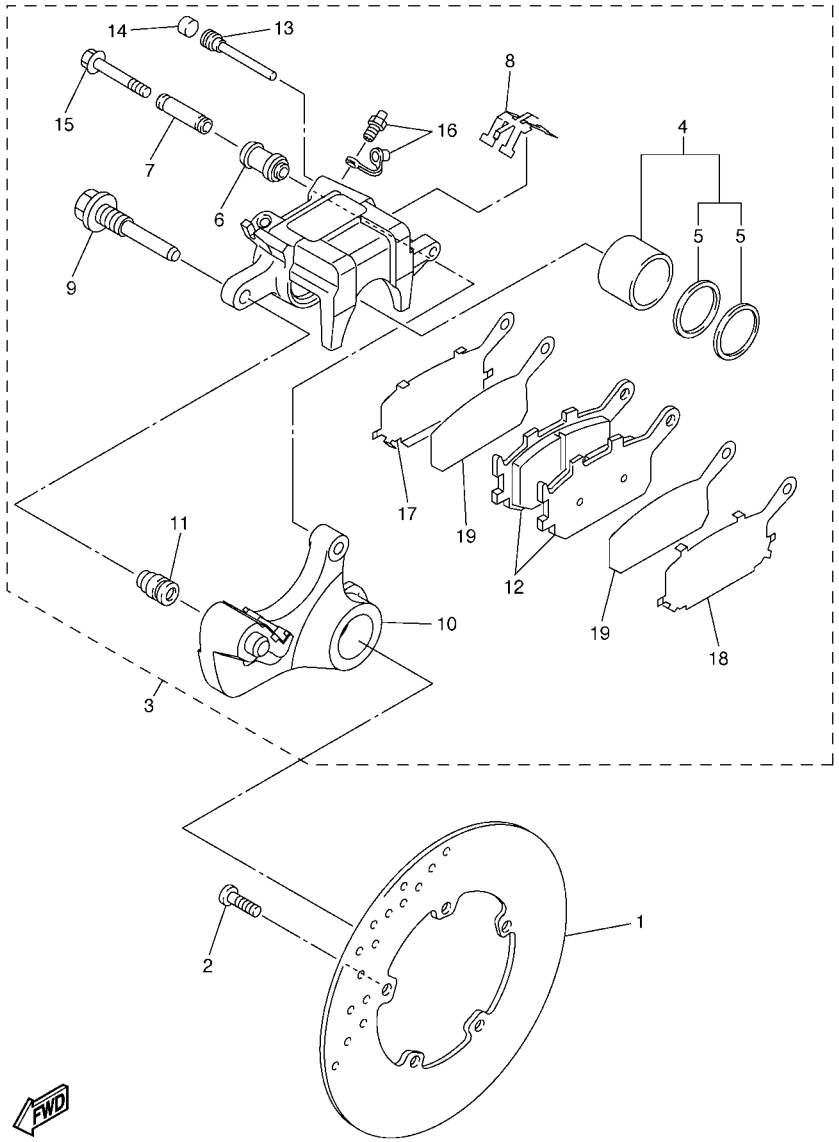

5VY1300-C330

FIG. 33 REAR BRAKE CALIPER

REF. NO.	PART NO.	DESCRIPTION	4C8B	4C8C	4C8D			REMARKS
1	5SL–2582W–00	DISK, REAR BRAKE 2	1	1	1			
2	90149–08009	SCREW	5	5	5			
3	5VY–2580W–11	CALIPER ASSY, REAR 2	1	1	1			
4	5VY–W0057–00	.PISTON ASSY, CALIPER	1	1	1			
5	5SL–W0047–00	..CALIPER SEAL KIT	1	1	1			
6	5SL–25917–00	.BOOT, CALIPER	1	1	1			
7	5SL–25838–00	.SLEEVE, CALIPER	1	1	1			
8	5SL–25919–00	.SUPPORT, PAD	1	1	1			
9	5SL–25914–00	.PIN, SLIDE	1	1	1			
10	5VY–25921–00	.BRACKET, SUPPORT	1	1	1			
11	3JD–25917–00	.BOOT, CALIPER	1	1	1			
12	5VX–W0046–00	.BRAKE PAD KIT 2	1	1	1			
13	8CR–25924–00	.PIN, PAD	1	1	1			
14	5DH–25916–00	.PLUG	1	1	1			
15	5SL–25926–00	.BOLT	1	1	1			
16	1UY–W0048–00	.BLEED SCREW KIT	1	1	1			
17	5SL–25827–00	.SHIM, CALIPER	1	1	1			
18	5SL–25827–10	.SHIM, CALIPER	1	1	1			
19	5SL–25828–01	.SHIM, CALIPER	2	2	2			

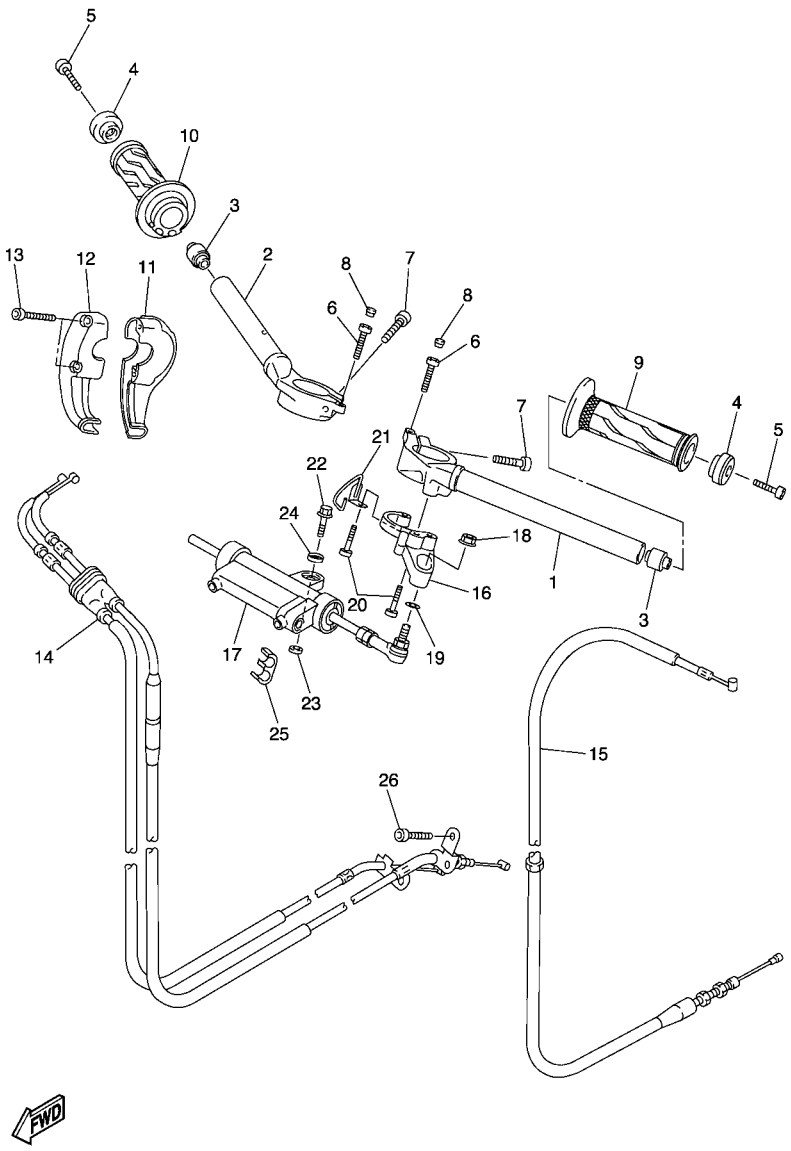

FIG. 34 STEERING HANDLE & CABLE

REF. NO.	PART NO.	DESCRIPTION	4C8B	4C8C	4C8D			REMARKS
1	5VY–26121–00	HANDLEBAR (LEFT)	1	1	1			
2	5VY–26122–00	HANDLEBAR (RIGHT)	1	1	1			
3	4XV–23434–00	HOLDER, DAMPER	2	2	2			
4	5PW–26246–00	END, GRIP	2	2	2			
5	91317–06025	BOLT	2	2	2			
6	91312–06025	BOLT	2	2	2			
7	91312–08030	BOLT	2	2	2			
8	2H9–23469–00	CAP, BOLT	2	2	2			
9	2C0–26241–00	GRIP	1	1	1			
10	4C8–26240–00	GRIP ASSY	1	1	1			
11	5VY–26281–00	CAP, GRIP UPPER	1	1	1			
12	3XW–26282–01	CAP, GRIP LOWER	1	1	1			
13	90110–05018	BOLT, HEXAGON SOCKET HEAD	2	2	2			
14	4C8–26302–00	THROTTLE CABLE ASSY	1	1	1			
15	4C8–26335–00	CABLE, CLUTCH	1	1	1			
16	5VY–23495–00	STAY, DAMPER	1	1	1			
17	5VY–23490–00	HANDLEBAR SHIMMY DAMPER ASSY	1	1	1			
18	95602–08200	NUT, SELF-LOCKING	1	1	1			
19	90201–08M09	WASHER, PLATE	1	1	1			
20	90110–06181	BOLT, HEXAGON SOCKET HEAD	3	3	3			
21	5VY–23389–00	GUIDE, CABLE	1	1	1			
22	95807–08030	BOLT, FLANGE	1	1	1			
23	90201–08676	WASHER, PLATE	1	1	1			
24	5VY–26398–00	WASHER	1	1	1			
25	90464–06214	CLAMP	1	1	1			
26	90110–05032	BOLT, HEXAGON SOCKET HEAD	2	2	2			

FIG. 35 FRONT MASTER CYLINDER

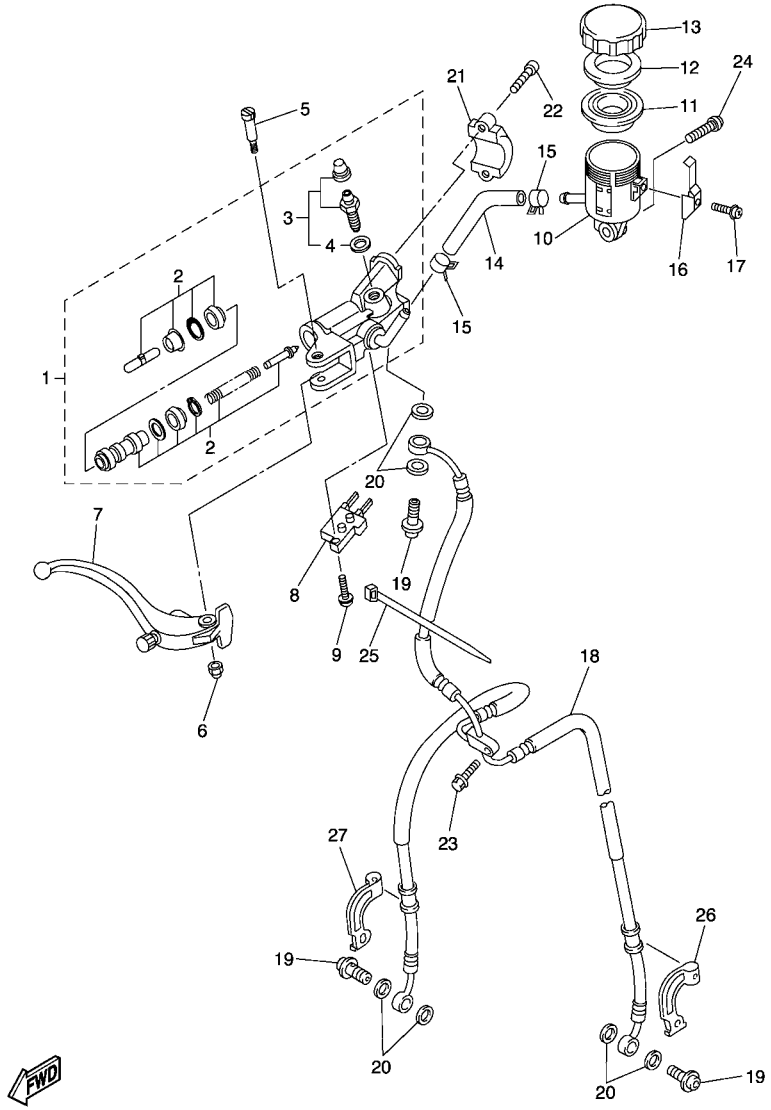

REF. NO.	PART NO.	DESCRIPTION	4C8B	4C8C	4C8D			REMARKS
1	5SL–W2587–00	MASTER CYLINDER SUB ASSY	1	1	1			
2	5VY–W0041–00	.CYLINDER KIT, MASTER	1	1	1			
3	5VY–W0048–00	.BLEED SCREW KIT	1	1	1			
4	5VY–25975–00	..SEAL 1	1	1	1			
5	5VY–2589F–01	BOLT, LEVER	1	1	1			
6	5VS–2586F–00	NUT, COVER	1	1	1			
7	5SL–83922–10	LEVER 2	1	1	1			
8	4HM–83980–00	FRONT STOP SWITCH ASSY	1	1	1			
9	5VS–2585H–00	SCREW,SET	1	1	1			
10	5SL–25894–20	TANK, RESERVOIR	1	1	1			
11	5VY–25854–00	DIAPHRAGM, RESERVOIR	1	1	1			
12	5VY–25855–00	BUSH,DIAPHRAGM	1	1	1			
13	5VY–25852–00	CAP, RESERVOIR	1	1	1			
14	5VY–25895–10	HOSE, RESERVOIR	1	1	1			
15	90467–120A3	CLIP	2	2	2			
16	5VY–2589G–00	HOLDER	1	1	1			
17	5VY–2589H–00	SCREW	1	1	1			
18	4C8–25872–00	HOSE, BRAKE 1	1	1	1			
19	90401–10172	BOLT, UNION	3	3	3			
20	90430–10005	GASKET	6	6	6			
21	5VS–25867–00	BRACKET, MASTER CYLINDER	1	1	1			
22	5VS–26332–00	BOLT	2	2	2			
23	90105–06041	BOLT, FLANGE	1	1	1			
24	90111–05026	BOLT,HEX. SOCKET BUTTON	1	1	1			
25	3MA–82591–00	BAND	2	2	2			
26	5VY–25875–00	HOLDER, BRAKE HOSE 1	1	1	1			
27	5VY–25876–00	HOLDER, BRAKE HOSE 2	1	1	1			

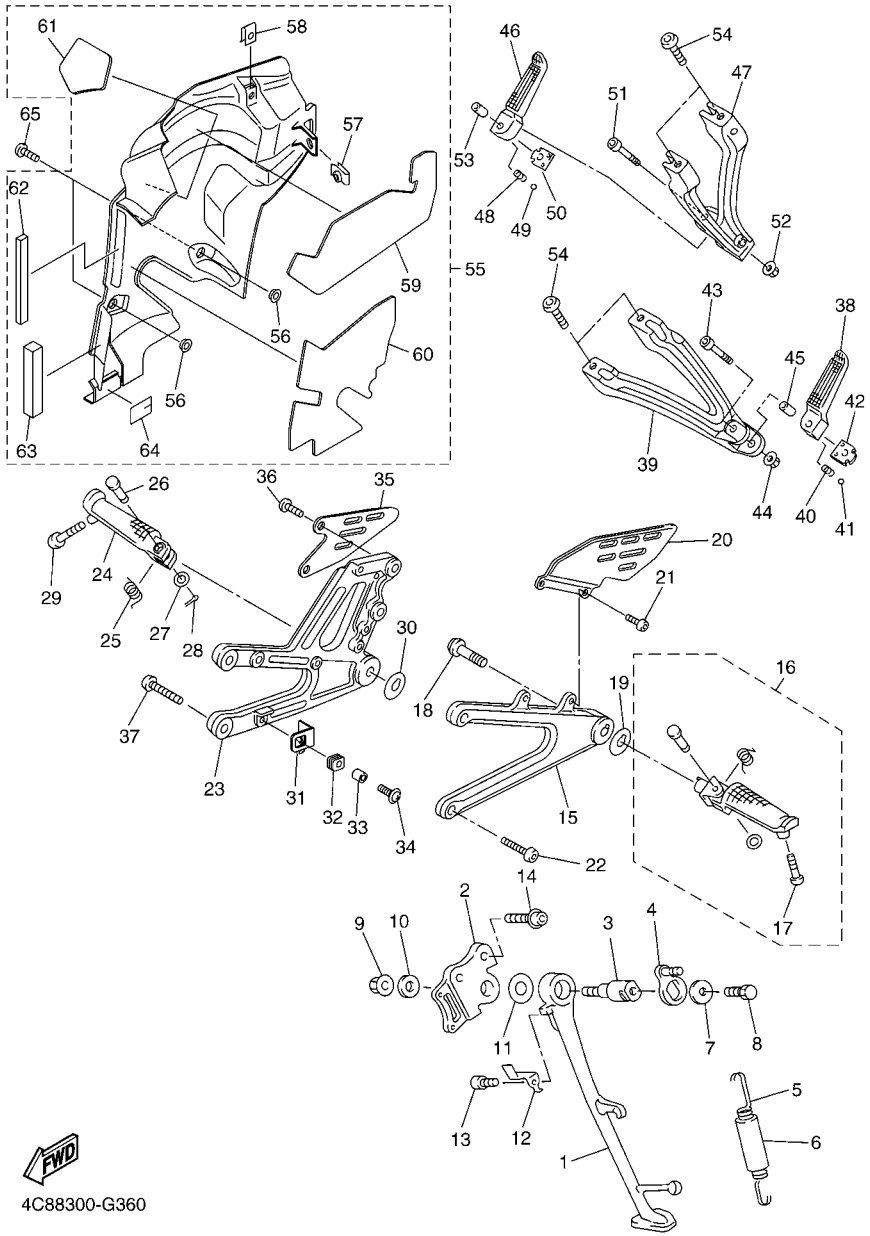

FIG. 36 STAND & FOOTREST

REF. NO.	PART NO.	DESCRIPTION	4C8B	4C8C	4C8D			REMARKS
1	5VY–27311–01	STAND, SIDE	1	1	1			
2	5JJ–27321–00	BRACKET, SIDE STAND	1	1	1			
3	4NX–27351–00	GUIDE, SIDE STAND	1	1	1			
4	5PW–27352–00	HOOK, SIDE STAND	1	1	1			
5	90506–18008	SPRING, TENSION	1	1	1			
6	90445–19002	HOSE (L60)	1	1	1			
7	90201–081R9	WASHER, PLATE	1	1	1			
8	90101–08662	BOLT	1	1	1			
9	95607–10200	NUT, U FLANGE	1	1	1			
10	90201–101J1	WASHER, PLATE	1	1	1			
11	90201–146F9	WASHER, PLATE	1	1	1			
12	5JJ–27315–00	LINK, SIDE STAND	1	1	1			
13	91317–06012	BOLT	1	1	1			
14	90109–10002	BOLT	2	2	2			
15	5VY–27442–01	BRACKET 2	1	1	1			
16	5VY–27410–00	FRONT FOOTREST ASSY (LEFT)	1	1	1			
17	90109–083E0	.BOLT	1	1	1			
18	90109–103A9	BOLT	1	1	1			
19	90214–10002	WASHER, CLAW	1	1	1			
20	4C8–27445–00	PLATE 1	1	1	1			
21	90111–06003	BOLT,HEX. SOCKET BUTTON	2	2	2			
22	90109–085G6	BOLT	2	2	2			
23	4C8–27443–00	BRACKET 3	1	1	1			
24	5JJ–27461–00	FOOTREST	1	1	1			
25	90508–18135	SPRING, TORSION	1	1	1			
26	90240–08084	PIN, CLEVIS	1	1	1			
27	90201–080E2	WASHER, PLATE	1	1	1			

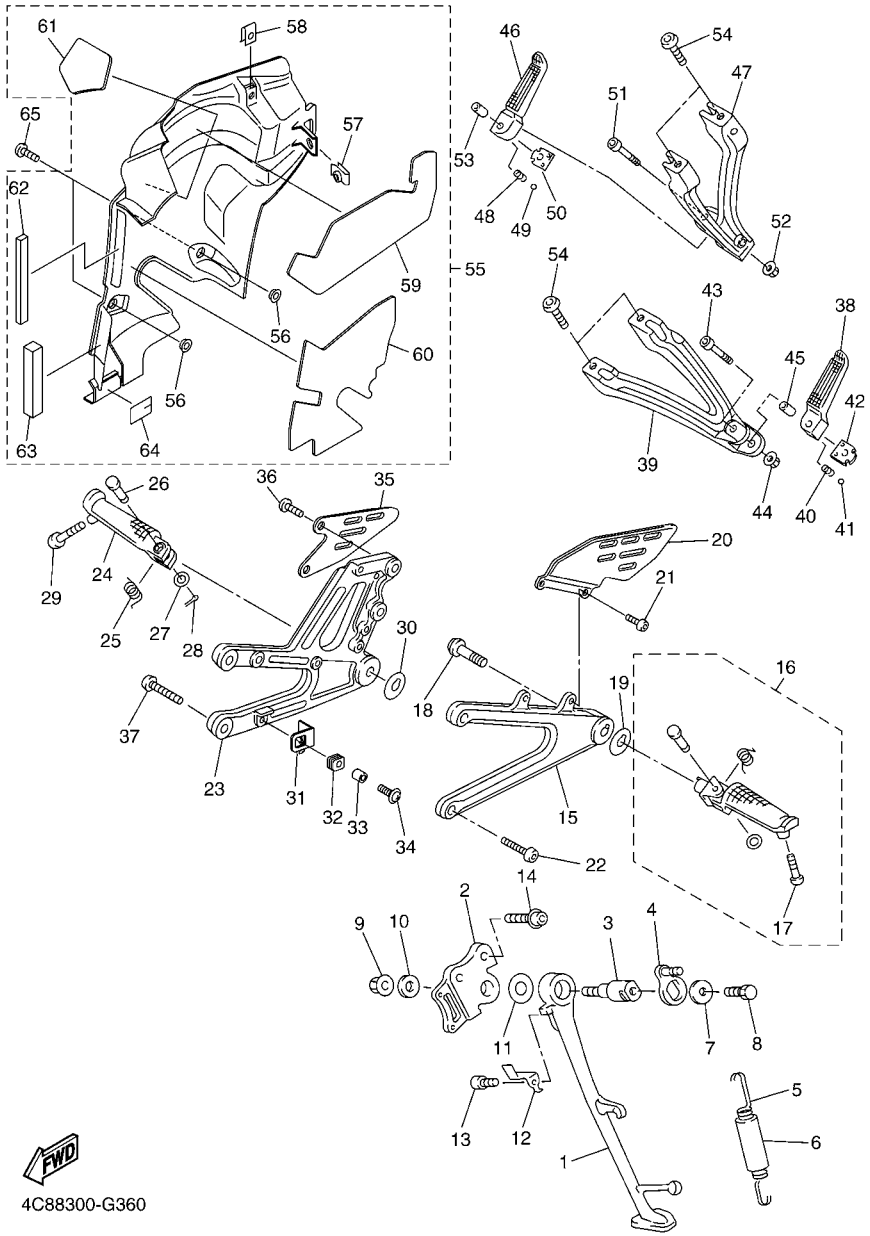

FIG. 36 STAND & FOOTREST

REF. NO.	PART NO.	DESCRIPTION	4C8B	4C8C	4C8D			REMARKS
28	91401–25015	PIN, COTTER	1	1	1			
29	90109–083E0	BOLT	1	1	1			
30	90201–08103	WASHER, PLATE	1	1	1			
31	4C8–2144G–00	STAY, STOP SWITCH	1	1	1			
32	90480–12607	GROMMET	1	1	1			
33	90387–06023	COLLAR	1	1	1			
34	90159–06150	SCREW, WITH WASHER	1	1	1			
35	4C8–27446–00	PLATE 2	1	1	1			
36	90111–06064	BOLT,HEX. SOCKET BUTTON	2	2	2			
37	90109–085G6	BOLT	2	2	2			
38	5JJ–27431–00	FOOTREST, REAR 1	1	1	1			
39	5VY–2741L–00	BRACKET 4	1	1	1			
40	90501–12743	SPRING, COMPRESSION	1	1	1			
41	93501–04011	BALL	1	1	1			
42	5JJ–27437–01	WASHER, SPECIAL	1	1	1			
43	91314–06035	BOLT	1	1	1			
44	95604–06200	NUT, U FLANGE	1	1	1			
45	90387–06697	COLLAR	1	1	1			
46	5JJ–27441–00	FOOTREST, REAR 2	1	1	1			
47	5VY–2742L–00	BRACKET 5	1	1	1			
48	90501–12743	SPRING, COMPRESSION	1	1	1			
49	93501–04011	BALL	1	1	1			
50	5JJ–27437–01	WASHER, SPECIAL	1	1	1			
51	91314–06035	BOLT	1	1	1			
52	95604–06200	NUT, U FLANGE	1	1	1			
53	90387–06697	COLLAR	1	1	1			
54	91312–08020	BOLT	4	4	4			

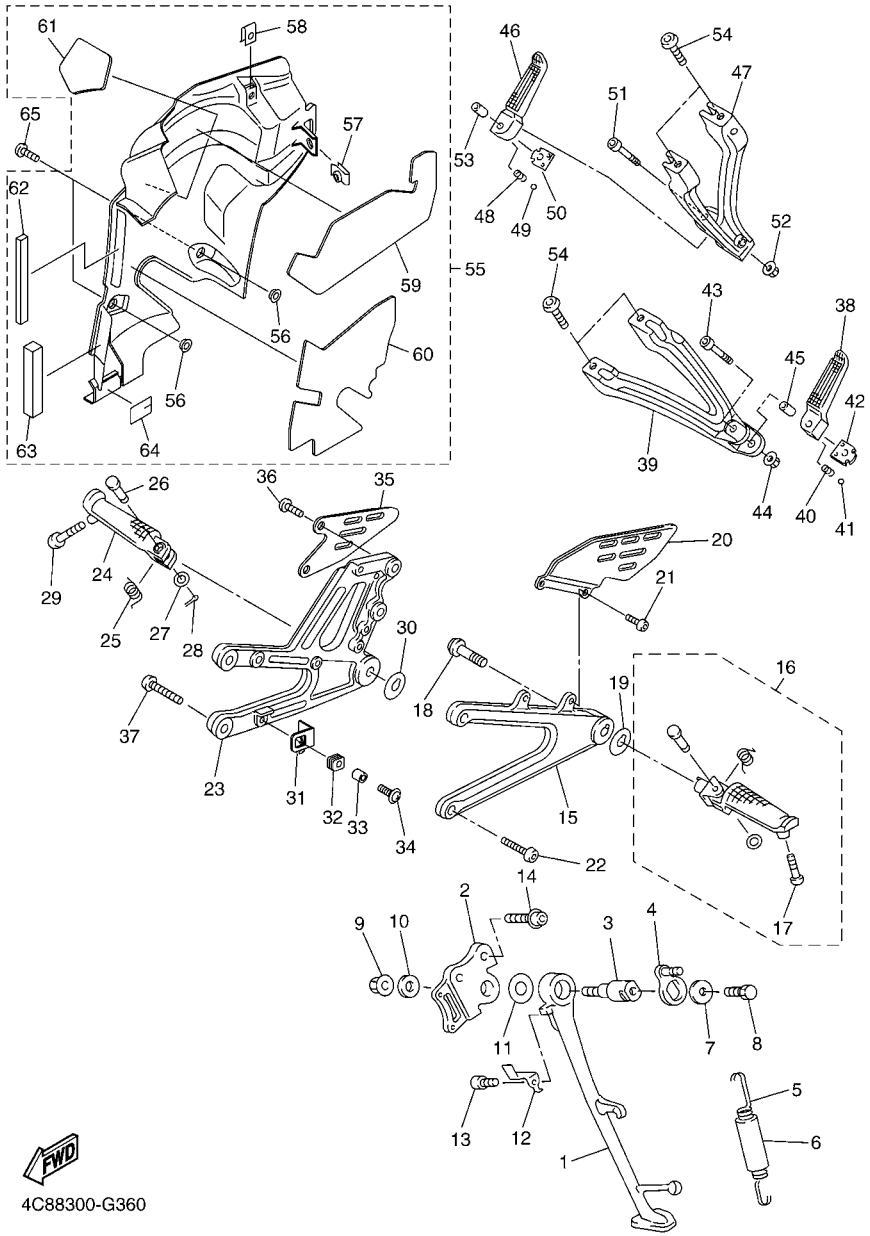

FIG. 36 STAND & FOOTREST

REF. NO.	PART NO.	DESCRIPTION	4C8B	4C8C	4C8D			REMARKS
55	4C8–27490–01	PROTECTOR ASSY	1	1	1			
56	90387–0603J	.COLLAR	2	2	2			
57	90183–05024	.NUT, SPRING	1	1	1			
58	90183–05076	.NUT, SPRING	1	1	1			
59	4C8–2749A–00	.SEAT 3	1	1	1			
60	4C8–2749B–00	.SEAT 4	1	1	1			
61	4C8–2749D–00	.SEAT 6	1	1	1			
62	4C8–21486–00	.DAMPER 2	1	1	1			
63	4C8–21488–00	.DAMPER	1	1	1			
64	4C8–2749D–10	.SEAT 6	1	1	1			
65	92012–06012	BOLT, BUTTON HEAD	2	2	2			

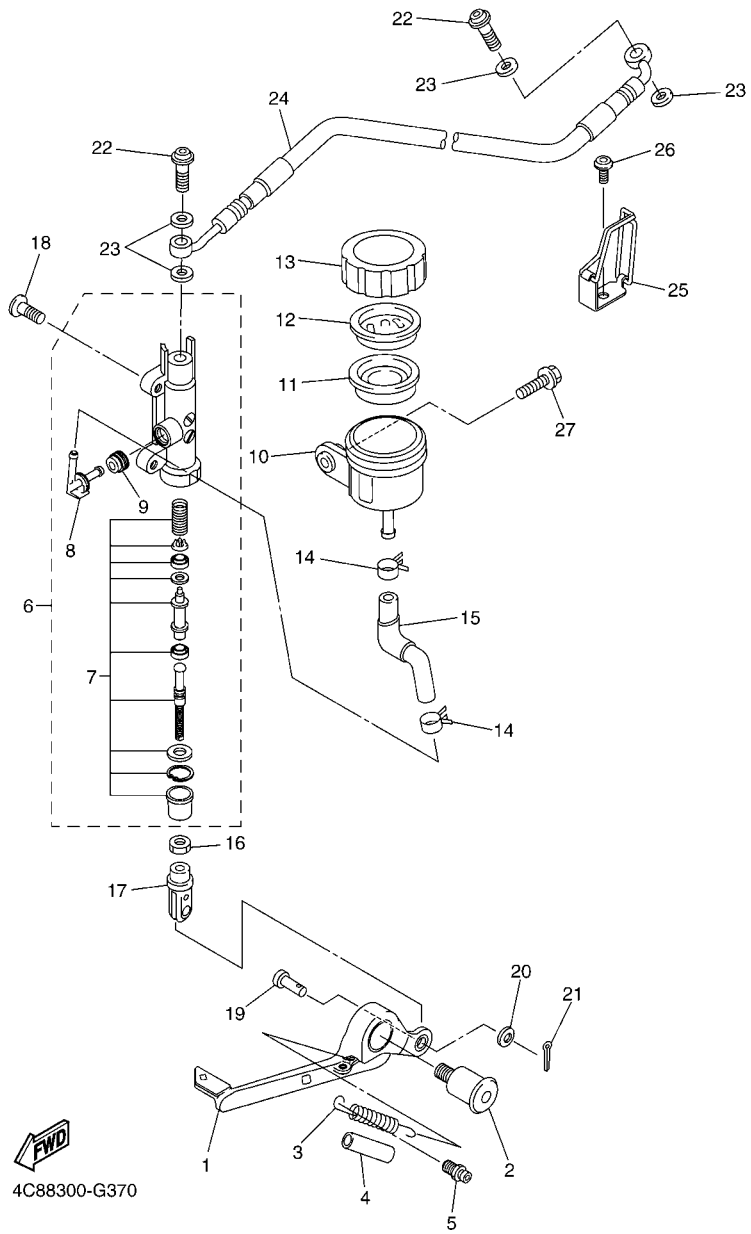

FIG. 37 REAR MASTER CYLINDER

REF. NO.	PART NO.	DESCRIPTION	4C8B	4C8C	4C8D			REMARKS
1	4C8–27211–00	PEDAL, BRAKE	1	1	1			
2	4C8–27434–00	BOLT	1	1	1			
3	90506–20193	SPRING, TENSION	1	1	1			
4	90446–15386	HOSE	1	1	1			
5	4C8–27813–00	PIN, PEDAL CRANK	1	1	1			
6	4C8–2583V–00	RR. MASTER CYLINDER ASSY.	1	1	1			
7	5VX–W0042–60	.CYLINDER KIT, MASTER	1	1	1			
8	2D1–2582A–00	.JOINT	1	1	1			
9	4BP–2585F–00	.BUSH	1	1	1			
10	2D1–25894–00	TANK, RESERVOIR	1	1	1			
11	5SL–25854–00	DIAPHRAGM, RESERVOIR	1	1	1			
12	5SL–25855–00	BUSH,DIAPHRAGM	1	1	1			
13	5SL–25852–00	CAP, RESERVOIR	1	1	1			
14	90467–120A3	CLIP	2	2	2			
15	4C8–25895–00	HOSE, RESERVOIR	1	1	1			
16	95307–08700	NUT	1	1	1			
17	5SL–27222–00	JOINT	1	1	1			
18	90111–08038	BOLT,HEX. SOCKET BUTTON	2	2	2			
19	91702–06018	PIN, CLEVIS	1	1	1			
20	92902–06200	WASHER	1	1	1			
21	91402–16012	PIN, COTTER	1	1	1			
22	90401–10172	BOLT, UNION	2	2	2			
23	90430–10005	GASKET	4	4	4			
24	4C8–25874–00	HOSE, BRAKE	1	1	1			
25	4C8–2588F–00	HOLDER, BRAKE HOSE 5	1	1	1			
26	90111–06038	BOLT,HEX. SOCKET BUTTON	1	1	1			
27	90119–05019	BOLT, WITH WASHER	1	1	1			

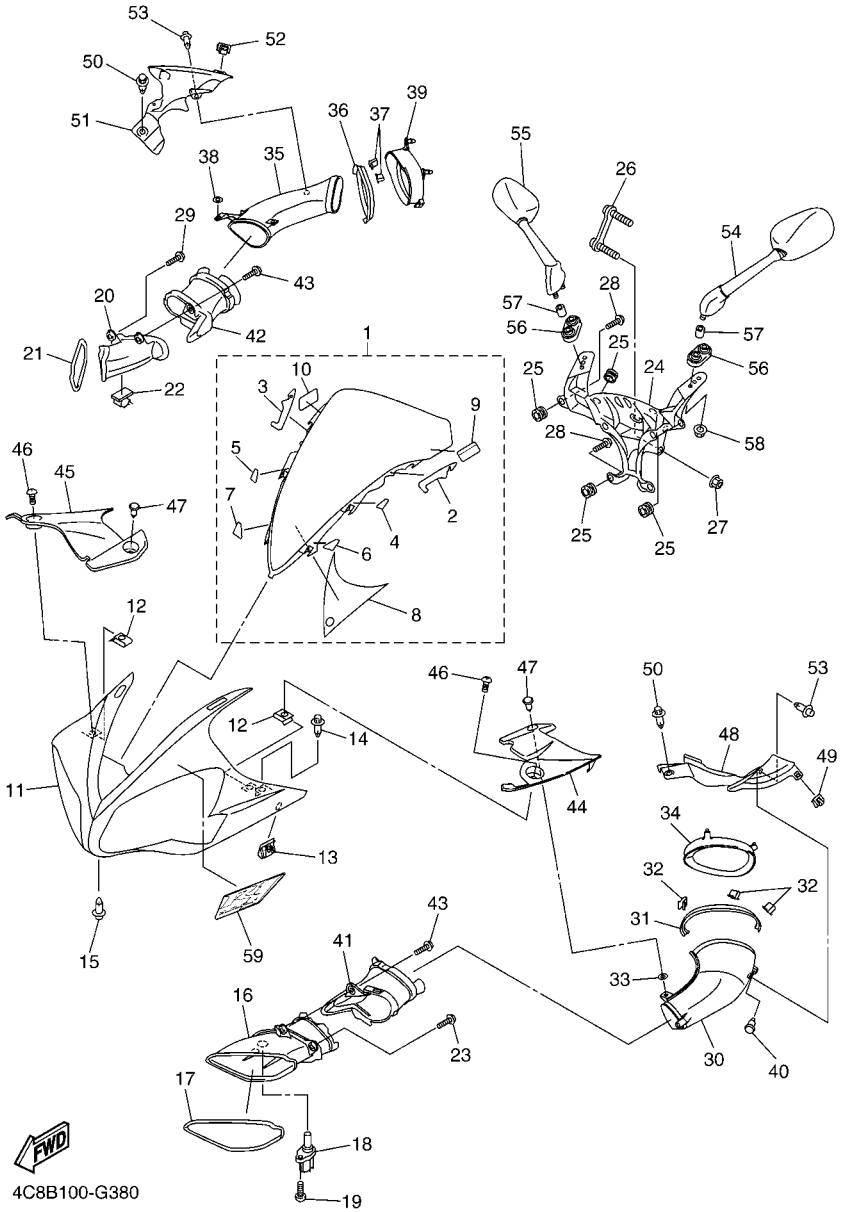

FIG. 38 COWLING 1

REF. NO.	PART NO.	DESCRIPTION	4C8B	4C8C	4C8D			REMARKS
1	4C8–Y2881–10	WINDSHIELD	1	1				
	4C8–Y2881–20	WINDSHIELD			1			
2	4C8–28428–00	.SEAL 1	1	1	1			
3	4C8–28429–00	.SEAL 2	1	1	1			
4	4C8–2844E–00	.SEAL 3	1	1	1			
5	4C8–2846F–00	.SEAL 4	1	1	1			
6	4C8–2847F–00	.SEAL 5	1	1	1			
7	4C8–2848F–00	.SEAL 6	1	1	1			
8	4C8–2832P–00	.GRAPHIC 18	1	1	1			
9	5JW–2835Y–00	.LABEL, CAUTION	1	1	1			
10	5JW–2835Y–10	.LABEL, CAUTION			1			
11	4C8–2835G–00–P0	BODY, FRONT UPPER 1	1	1	1			UR FOR DPBMC
	4C8–2835G–00–P1	BODY, FRONT UPPER 1	1	1	1			UR FOR SMX
	4C8–2835G–00–P3	BODY, FRONT UPPER 1	1	1				UR FOR DRMK
	4C8–2835G–00–P2	BODY, FRONT UPPER 1			1			UR FOR BWC1
12	90183–05076	NUT, SPRING	2	2	2			
13	5PW–2177L–00	PLATE, SPRING	2	2	2			
14	90269–06008	RIVET	2	2	2			
15	90269–06008	RIVET	2	2	2			
16	4C8–2837N–00	GRILL, AIR INTAKE 1	1	1	1			
17	4C8–28345–00	MOLE 1	1	1	1			
18	8FP–85886–00	SENSOR, AIR TEMPERATURE	1	1	1			
19	97707–50116	SCREW, TAPPING	1	1	1			
20	4C8–2837R–00	GRILL, AIR INTAKE 2	1	1	1			
21	4C8–28346–00	MOLE 2	1	1	1			
22	90464–25160	CLAMP	1	1	1			
23	90160–05007	SCREW, ROUND TAPPING	2	2	2			

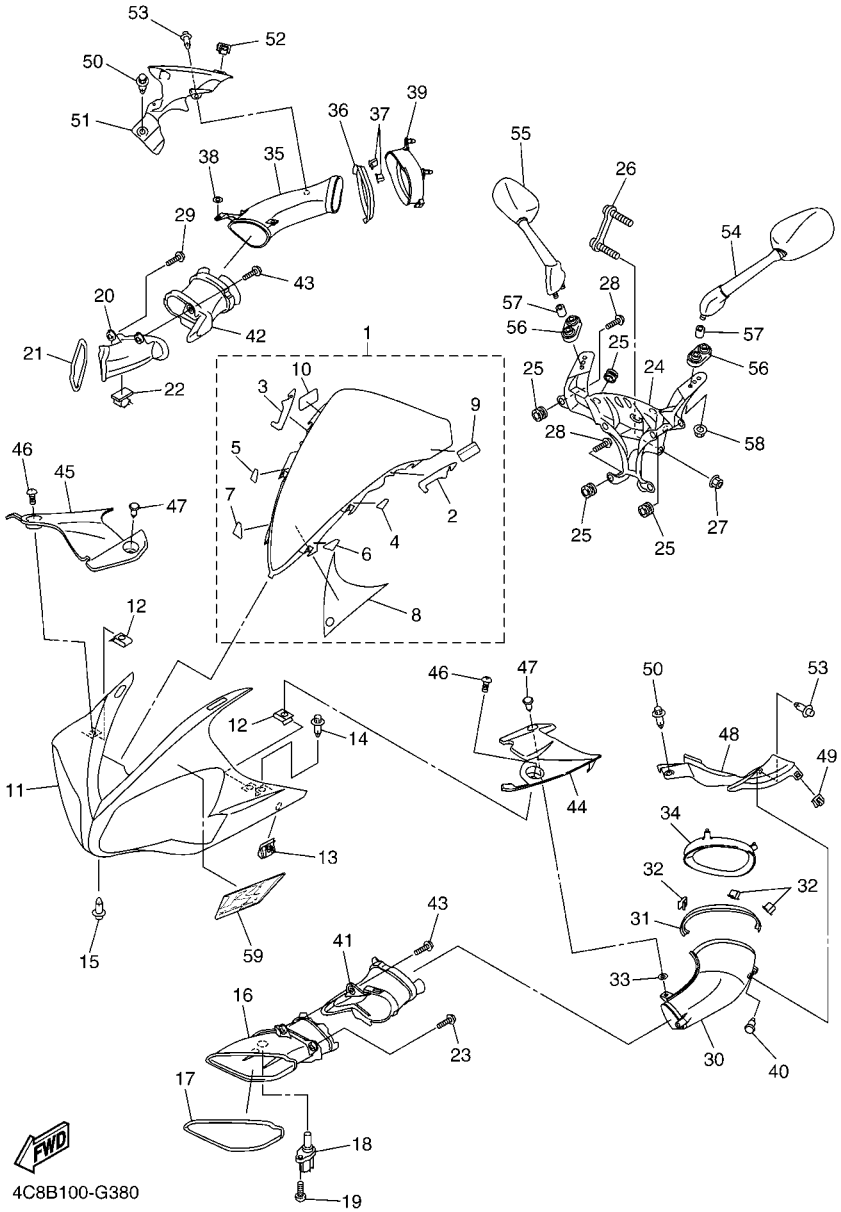

FIG. 38 COWLING 1

REF. NO.	PART NO.	DESCRIPTION	4C8B	4C8C	4C8D			REMARKS
24	4C8–28356–00	STAY 1	1	1	1			
25	4XV–83513–00	DAMPER	9	9	9			
26	4C8–28336–00	PLATE	1	1	1			
27	95607–08200	NUT, SELF-LOCKING	2	2	2			
28	90160–05006	SCREW, ROUND TAPPING	6	6	6			
29	90160–05007	SCREW, ROUND TAPPING	3	3	3			
30	4C8–2838N–00–P1	DUCT 1	1	1	1			UR FOR DPBMC,SMX
	4C8–2838N–00–P3	DUCT 1	1	1				UR FOR DRMK
	4C8–2838N–00–P5	DUCT 1			1			UR FOR BWC1
31	4C8–2834E–00	DAMPER 3	1	1	1			
32	1FK–2171H–00	GUIDE	3	3	3			
33	5VY–2834V–00	PROTECTOR 1	1	1	1			
34	4C8–28371–00	DAMPER	1	1	1			
35	4C8–2838R–00–P1	DUCT 2	1	1	1			UR FOR DPBMC,SMX
	4C8–2838R–00–P3	DUCT 2	1	1				UR FOR DRMK
	4C8–2838R–00–P5	DUCT 2			1			UR FOR BWC1
36	4C8–2834F–00	DAMPER	1	1	1			
37	1FK–2171H–00	GUIDE	3	3	3			
38	5VY–2834V–00	PROTECTOR 1	1	1	1			
39	4C8–28372–00	DAMPER	1	1	1			
40	90269–07007	RIVET	2	2	2			
41	4C8–2838T–00	DUCT 3	1	1	1			
42	4C8–2838U–00	DUCT 4	1	1	1			
43	90160–05007	SCREW, ROUND TAPPING	2	2	2			
44	4C8–2837L–00	PANEL, CONSOLE 1	1	1	1			
45	4C8–2837M–00	PANEL, CONSOLE 2	1	1	1			
46	90154–05013	SCREW, BINDING	2	2	2			

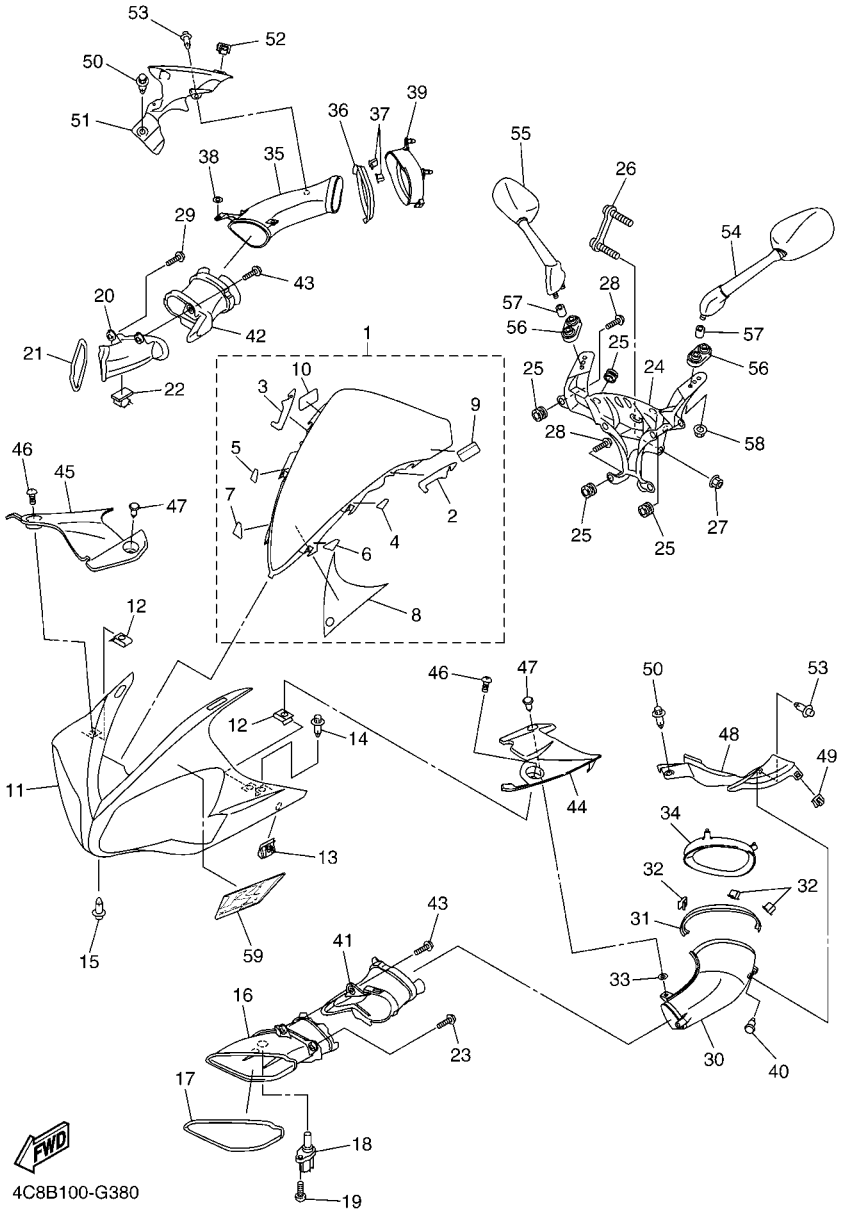

FIG. 38 COWLING 1

REF. NO.	PART NO.	DESCRIPTION	4C8B	4C8C	4C8D			REMARKS
47	90269–06008	RIVET	2	2	2			
48	4C8–2837V–00	GRILL, AIR OUTLET 1	1	1	1			
49	5PW–2177L–00	PLATE, SPRING	1	1	1			
50	90269–06001	RIVET	2	2	2			
51	4C8–2837W–00	GRILL, AIR OUTLET 2	1	1	1			
52	5PW–2177L–00	PLATE, SPRING	1	1	1			
53	90269–06001	RIVET	2	2	2			
54	4C8–26280–00	REAR VIEW MIRROR ASSY (LEFT)	1	1	1			
55	4C8–26290–00	REAR VIEW MIRROR ASSY (RIGHT)	1	1	1			
56	4C8–26298–00	PLATE, MIRROR FITTING 1	2	2	2			
57	90387–064T3	COLLAR	4	4	4			
58	90176–06055	NUT, CROWN	4	4	4			
59	4C8–28328–20	EMBLEM			1			FOR BWC1

FIG. 39 COWLING 2

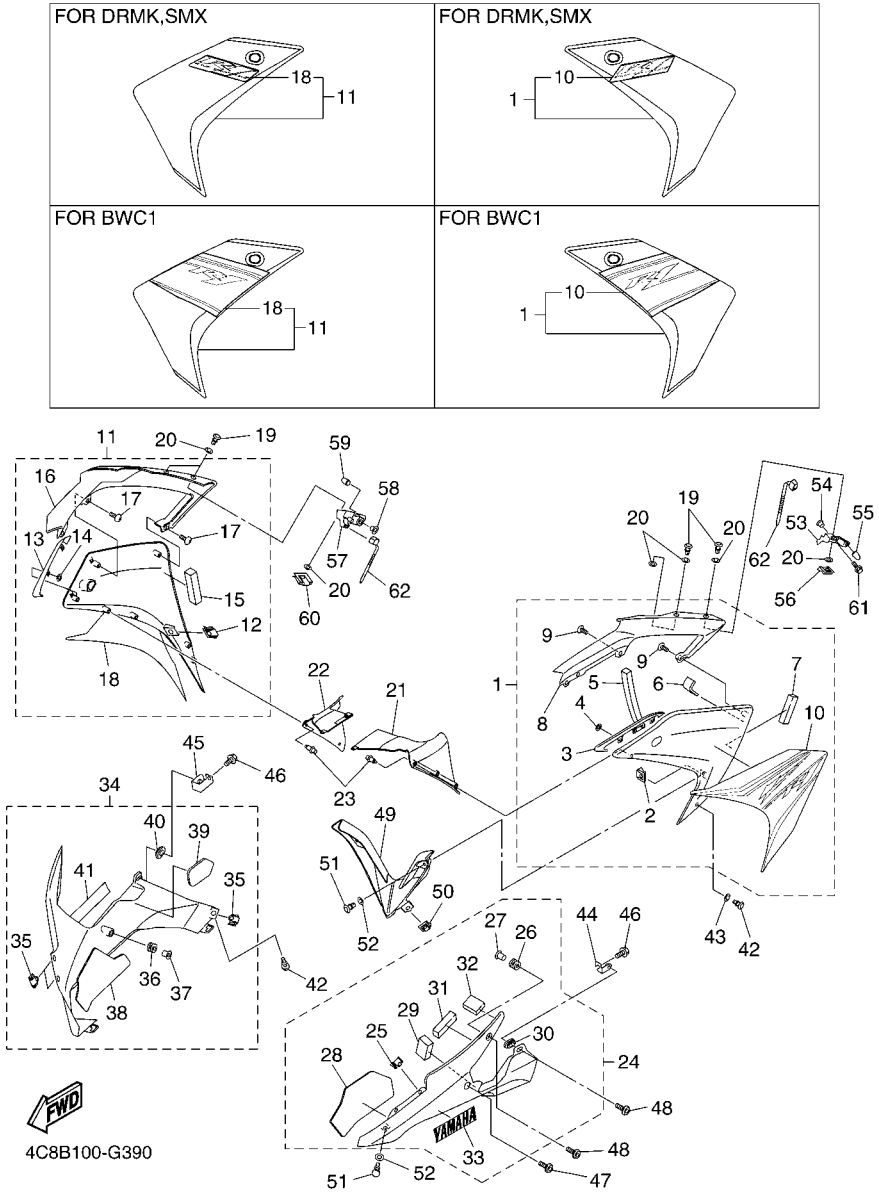

REF. NO.	PART NO.	DESCRIPTION	4C8B	4C8C	4C8D			REMARKS
1	4C8–Y283U–90–P0	PANEL ASSEMBLY 1	1	1	1			UR FOR DPBMC
	4C8–Y283U–A0–P3	PANEL ASSEMBLY 1	1	1	1			UR FOR SMX
	4C8–Y283U–B0–P5	PANEL ASSEMBLY 1	1	1				UR FOR DRMK
	4C8–Y283U–70–P2	PANEL ASSEMBLY 1			1			UR FOR BWC1
2	5PW–2177L–00	.PLATE, SPRING	1	1	1			
3	4C8–28219–00	.COVER 1	1	1	1			
4	90183–05M02	.NUT, SPRING	2	2	2			
5	4C8–28425–00	.DAMPER 3	1	1	1			
6	4C8–28435–00	.DAMPER 4	1	1	1			
7	4C8–28217–00	.DAMPER 1	1	1	1			
8	4C8–2117V–00–P0	.COVER 7	1	1	1			UR FOR DPBMC
	4C8–2117V–00–P1	.COVER 7	1	1	1			UR FOR SMX
	4C8–2117V–00–P3	.COVER 7	1	1				UR FOR DRMK
	4C8–2117V–00–P2	.COVER 7			1			UR FOR BWC1
9	97702–50016	.SCREW, TAPPING	3	3	3			
10	4C8–28391–60	.GRAPHIC 1	1	1	1			UR FOR DPBMC
	4C8–2834C–10	.EMBLEM 1	1	1	1			UR FOR SMX
	4C8–2834C–00	.EMBLEM 1	1	1				UR FOR DRMK
	4C8–28391–40	.GRAPHIC 1			1			UR FOR BWC1
11	4C8–Y283V–90–P0	PANEL ASSEMBLY 2	1	1	1			UR FOR DPBMC
	4C8–Y283V–A0–P3	PANEL ASSEMBLY 2	1	1	1			UR FOR SMX
	4C8–Y283V–B0–P5	PANEL ASSEMBLY 2	1	1				UR FOR DRMK
	4C8–Y283V–70–P2	PANEL ASSEMBLY 2			1			UR FOR BWC1
12	5PW–2177L–00	.PLATE, SPRING	1	1	1			
13	4C8–28229–00	.COVER 2	1	1	1			
14	90183–05M02	.NUT, SPRING	2	2	2			
15	4C8–2847N–00	.DAMPER 8	1	1	1			

FIG. 39 COWLING 2

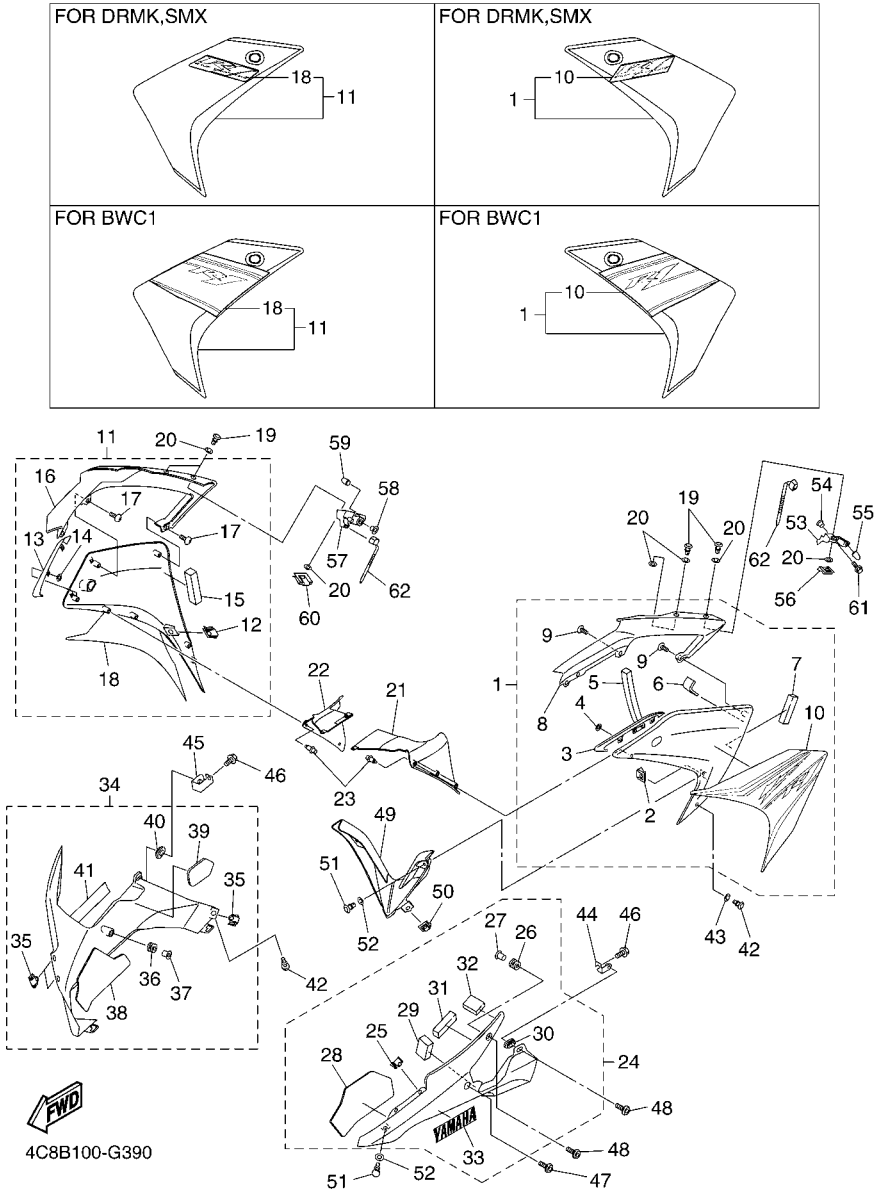

REF. NO.	PART NO.	DESCRIPTION	4C8B	4C8C	4C8D			REMARKS
16	4C8–2117W–00–P0	.COVER 8	1	1	1			UR FOR DPBMC
	4C8–2117W–00–P1	.COVER 8	1	1	1			UR FOR SMX
	4C8–2117W–00–P3	.COVER 8	1	1				UR FOR DRMK
	4C8–2117W–00–P2	.COVER 8			1			UR FOR BWC1
17	97702–50016	.SCREW, TAPPING	3	3	3			
18	4C8–28392–60	.GRAPHIC 2	1	1	1			UR FOR DPBMC
	4C8–2834C–10	.EMBLEM 1	1	1	1			UR FOR SMX
	4C8–2834C–00	.EMBLEM 1	1	1				UR FOR DRMK
	4C8–28392–40	.GRAPHIC 2			1			UR FOR BWC1
19	5PW–28386–00	HEAD	4	4	4			
20	2TK–21757–00	WASHER, SPECIAL 1	8	8	8			
21	4C8–2836K–00	PANEL, INNER 1	1	1	1			
22	4C8–2836L–00	PANEL, INNER 2	1	1	1			
23	90269–06008	RIVET	6	6	6			
24	4C8–Y2808–90–P1	COVER ASSY, UNDER	1	1	1			UR FOR DPBMC
	4C8–Y2808–80–P1	COVER ASSY, UNDER	1	1	1			UR FOR SMX
	4C8–Y2808–90–P3	COVER ASSY, UNDER	1	1				UR FOR DRMK
	4C8–Y2808–70–P4	COVER ASSY, UNDER			1			UR FOR BWC1
25	5PW–2177L–00	.PLATE, SPRING	2	2	2			
26	90480–12596	.GROMMET	2	2	2			
27	90387–065J6	.COLLAR	2	2	2			
28	4C8–2848L–00	.SEAT 3	1	1	1			
29	4C8–2837J–00	.DAMPER 5	1	1	1			
30	5TA–21749–00	.COLLAR	1	1	1			
31	4C8–28415–00	.DAMPER 1	1	1	1			
32	4C8–28416–00	.DAMPER 2	1	1	1			
33	4C8–2153E–80	.EMBLEM, YAMAHA	1	1	1			UR FOR DPBMC

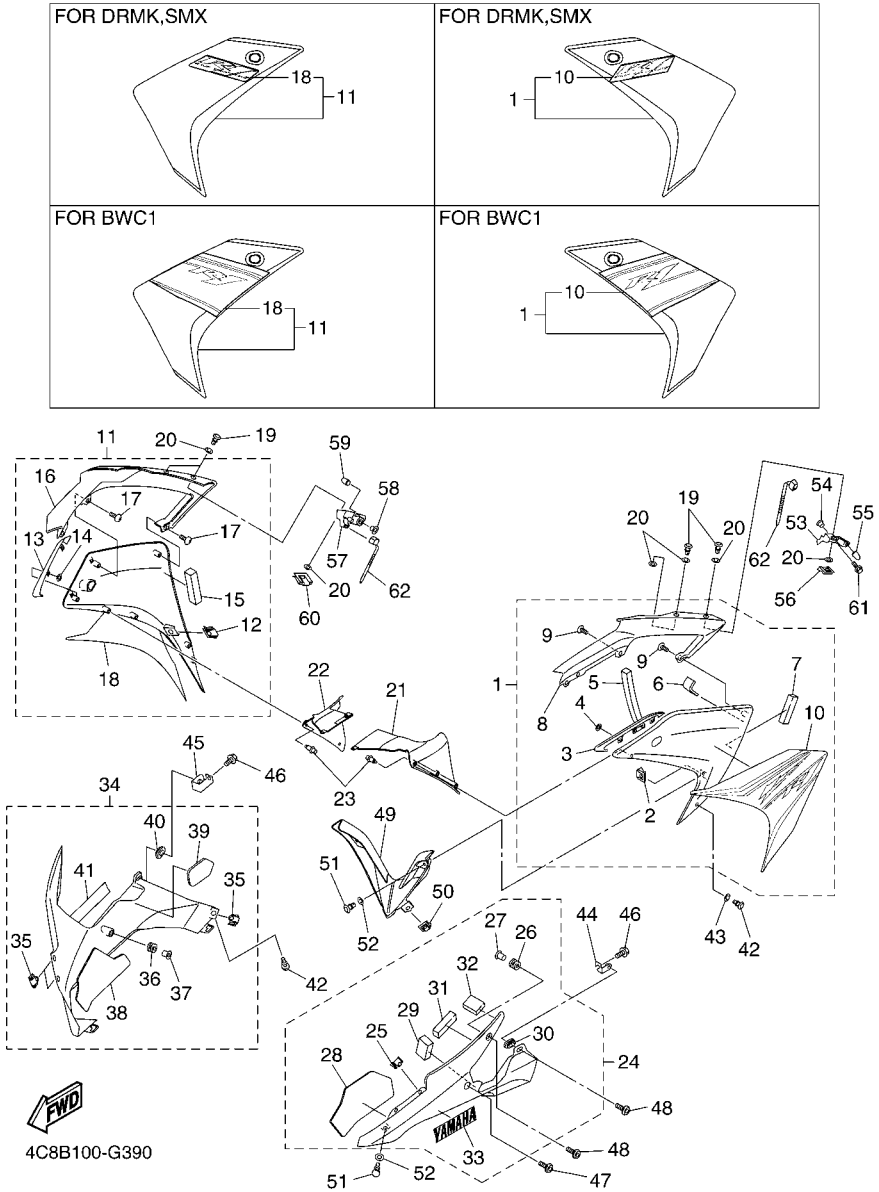

FIG. 39 COWLING 2

REF. NO.	PART NO.	DESCRIPTION	4C8B	4C8C	4C8D			REMARKS
33	4C8–2153E–70	.EMBLEM, YAMAHA	1	1	1			UR FOR SMX
	4C8–2153A–00	.EMBLEM, YAMAHA	1	1				UR FOR DRMK
	4C8–2153E–60	.EMBLEM, YAMAHA			1			UR FOR BWC1
34	4C8–Y2809–90–P1	COVER ASSY 2, UNDER	1	1	1			UR FOR DPBMC
	4C8–Y2809–80–P1	COVER ASSY 2, UNDER	1	1	1			UR FOR SMX
	4C8–Y2809–90–P3	COVER ASSY 2, UNDER	1	1				UR FOR DRMK
	4C8–Y2809–70–P4	COVER ASSY 2, UNDER			1			UR FOR BWC1
35	5PW–2177L–00	.PLATE, SPRING	3	3	3			
36	90480–12596	.GROMMET	2	2	2			
37	90387–065J6	.COLLAR	2	2	2			
38	4C8–2848M–00	.SEAT 4	1	1	1			
39	4C8–2848P–00	.SEAT 6	1	1	1			
40	5TA–21749–00	.COLLAR	1	1	1			
41	4C8–2153E–80	.EMBLEM, YAMAHA	1	1	1			UR FOR DPBMC
	4C8–2153E–70	.EMBLEM, YAMAHA	1	1	1			UR FOR SMX
	4C8–2153A–00	.EMBLEM, YAMAHA	1	1				UR FOR DRMK
	4C8–2153E–60	.EMBLEM, YAMAHA			1			UR FOR BWC1
42	5PW–28386–00	HEAD	3	3	3			
43	2TK–21757–00	WASHER, SPECIAL 1	4	4	4			
44	4C8–2836A–00	BRACKET 1	1	1	1			
45	4C8–2836E–00	BRACKET 2	1	1	1			
46	90109–06056	BOLT	2	2	2			
47	90111–06030	BOLT,HEX. SOCKET BUTTON	3	3	3			
48	90149–06105	SCREW	3	3	3			
49	4C8–2836M–00	PANEL, INNER 3	1	1	1			
50	5PW–2177L–00	PLATE, SPRING	2	2	2			
51	5PW–28386–00	HEAD	8	8	8			

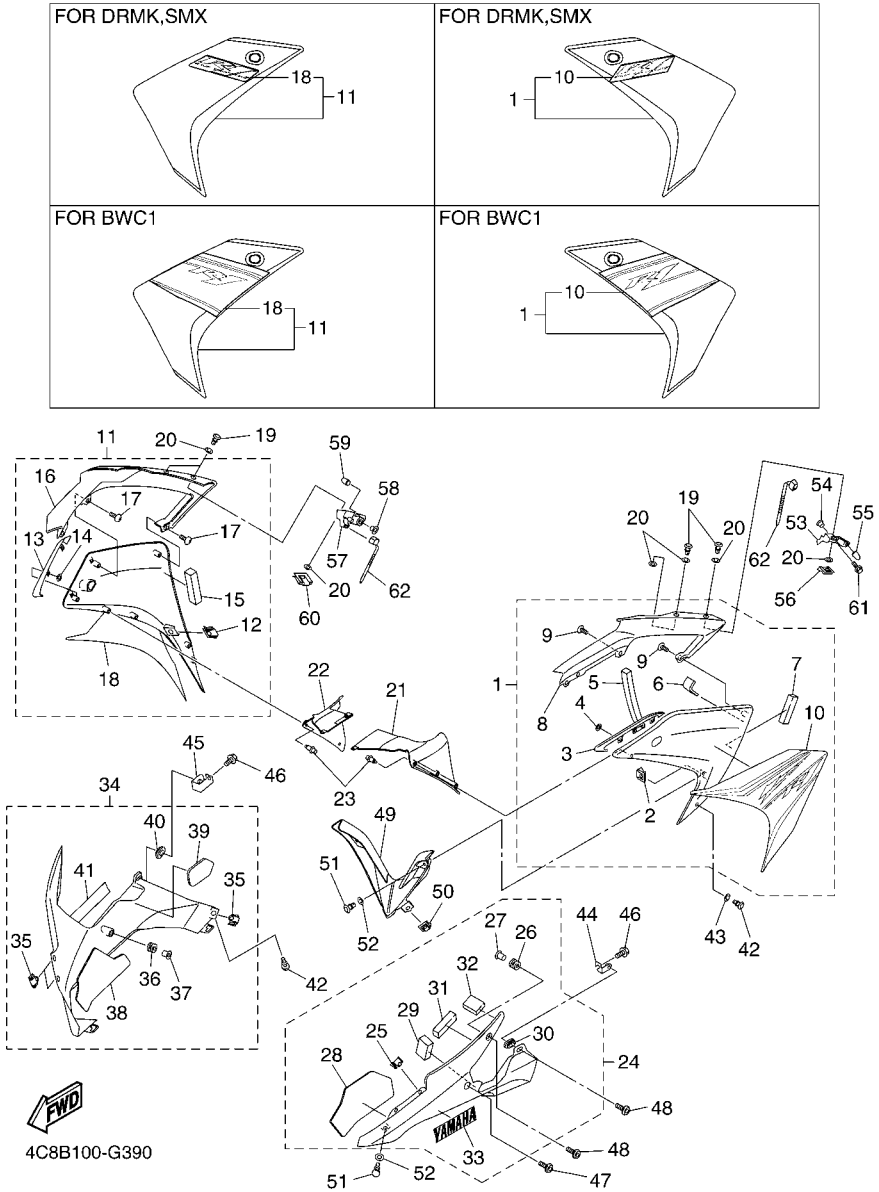

FIG. 39 COWLING 2

REF. NO.	PART NO.	DESCRIPTION	4C8B	4C8C	4C8D			REMARKS
52	2TK–21757–00	WASHER, SPECIAL 1	12	12	12			
53	4C8–2836F–01	BRACKET 3	1	1	1			
54	90387–06681	COLLAR	1	1	1			
55	2MG–21639–00	DAMPER 2	1	1	1			
56	5PW–2177L–00	PLATE, SPRING	1	1	1			
57	4C8–2836G–01	BRACKET 4	1	1	1			
58	90387–06681	COLLAR	1	1	1			
59	2MG–21639–00	DAMPER 2	1	1	1			
60	5PW–2177L–00	PLATE, SPRING	1	1	1			
61	90119–06052	BOLT, WITH WASHER	2	2	2			
62	90464–13077	CLAMP	2	2	2			

FIG. 40 GENERATOR

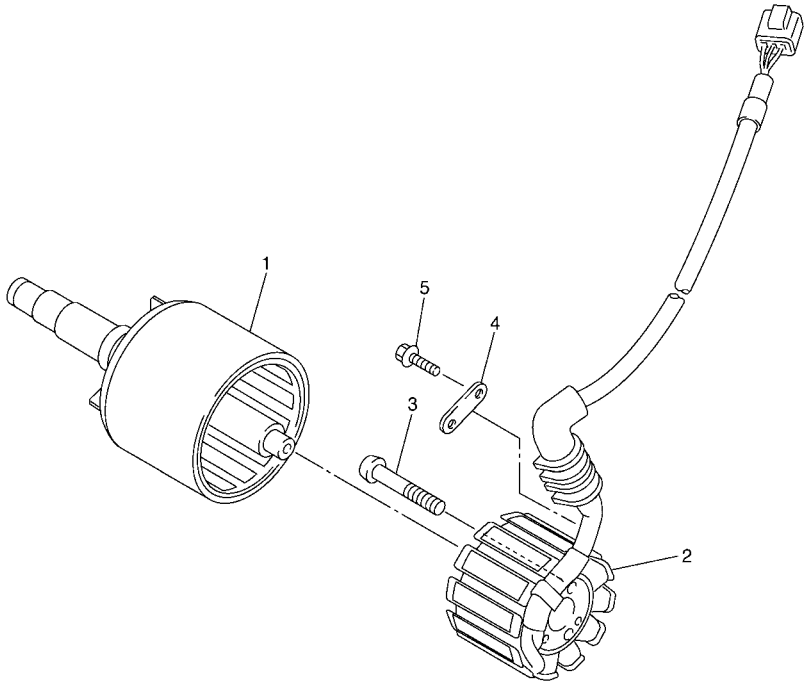

5VY1300-C400

REF. NO.	PART NO.	DESCRIPTION	4C8B	4C8C	4C8D			REMARKS
1	5VY–81450–00	ROTOR ASSY	1	1	1			
2	2D1–81410–01	STATOR ASSY	1	1	1			
3	90149–06067	SCREW	3	3	3			
4	4C8–15191–00	PLATE	1	1	1			
5	90105–06078	BOLT, FLANGE	1	1	1			

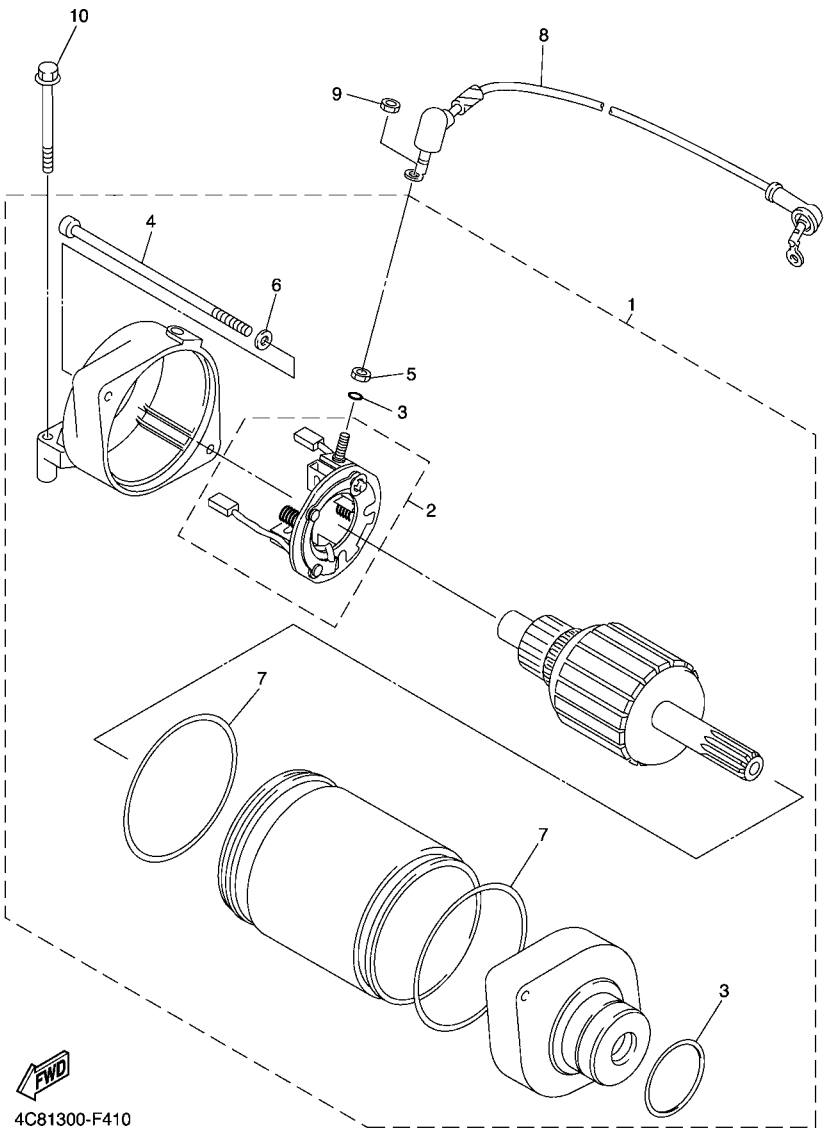

FIG. 41 STARTING MOTOR

REF. NO.	PART NO.	DESCRIPTION	4C8B	4C8C	4C8D			REMARKS
1	4C8–81890–01	MOTOR ASSY	1	1	1			
2	4C8–81801–01	.BRUSH SET	1	1	1			
3	93210–25711	.O-RING	1	1	1			
4	4C8–81846–00	.SCREW	2	2	2			
5	95302–06700	.NUT	1	1	1			
6	90201–05021	.WASHER, PLATE	2	2	2			
7	4C8–81861–00	.GASKET	2	2	2			
8	4C8–8183G–00	CORD COMP.	1	1	1			
9	95302–06700	NUT	1	1	1			
10	95022–06040	BOLT, FLANGE	2	2	2			

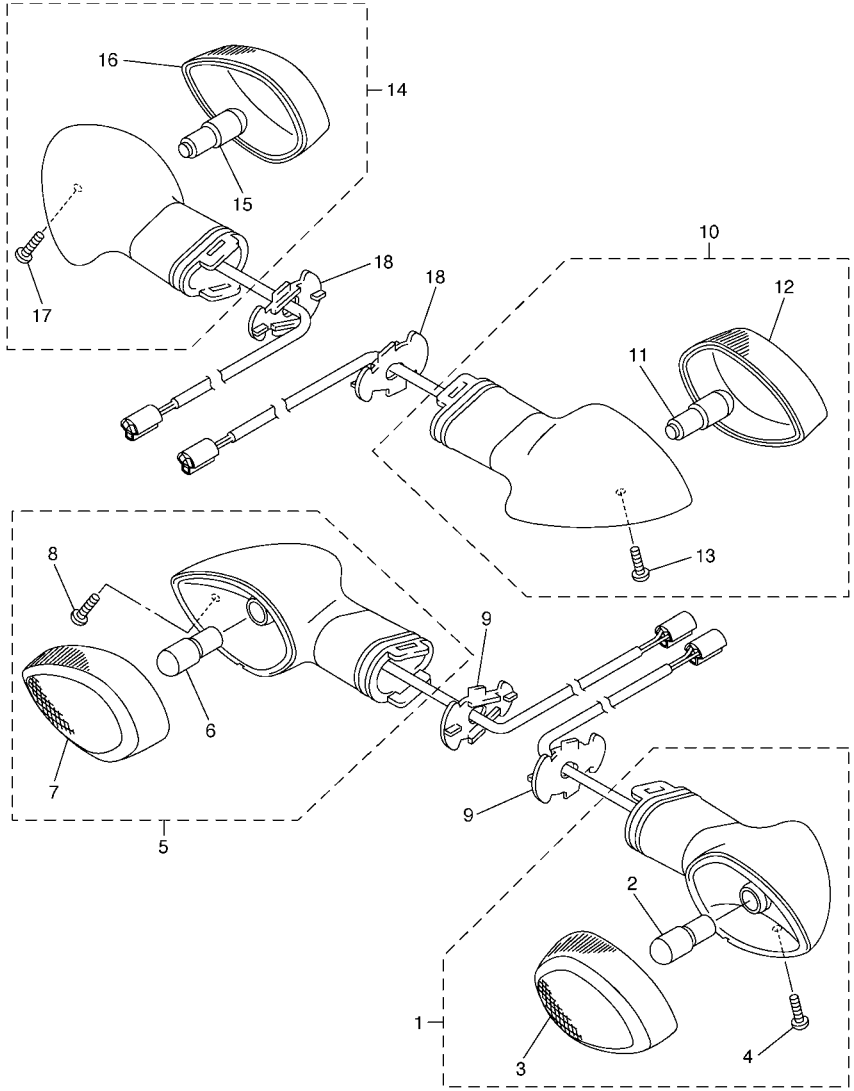

2C05100-E410

FIG. 42 FLASHER LIGHT

REF. NO.	PART NO.	DESCRIPTION	4C8B	4C8C	4C8D			REMARKS
1	2C0–83310–10	FRONT FLASHER LIGHT ASSY 1	1	1	1			
2	1A2–84714–41	.BULB (12V-21/5W)	1	1	1			
3	2C0–8333A–10	.LENS COMP	1	1	1			
4	97702–40010	.SCREW, TAPPING	1	1	1			
5	2C0–83320–10	FRONT FLASHER LIGHT ASSY 2	1	1	1			
6	1A2–84714–41	.BULB (12V-21/5W)	1	1	1			
7	2C0–8334A–10	.LENS COMP	1	1	1			
8	97702–40010	.SCREW, TAPPING	1	1	1			
9	2C0–83318–00	STAY, FLASHER 1	2	2	2			
10	2C0–83330–10	REAR FLASHER LIGHT ASSY 1	1	1	1			
11	306–83311–40	.BULB, FLASHER (12V-21W)	1	1	1			
12	2C0–8334A–10	.LENS COMP	1	1	1			
13	97702–40010	.SCREW, TAPPING	1	1	1			
14	2C0–83340–10	REAR FLASHER LIGHT ASSY 2	1	1	1			
15	306–83311–40	.BULB, FLASHER (12V-21W)	1	1	1			
16	2C0–8333A–10	.LENS COMP	1	1	1			
17	97702–40010	.SCREW, TAPPING	1	1	1			
18	2C0–83318–00	STAY, FLASHER 1	2	2	2			

FIG. 43 METER

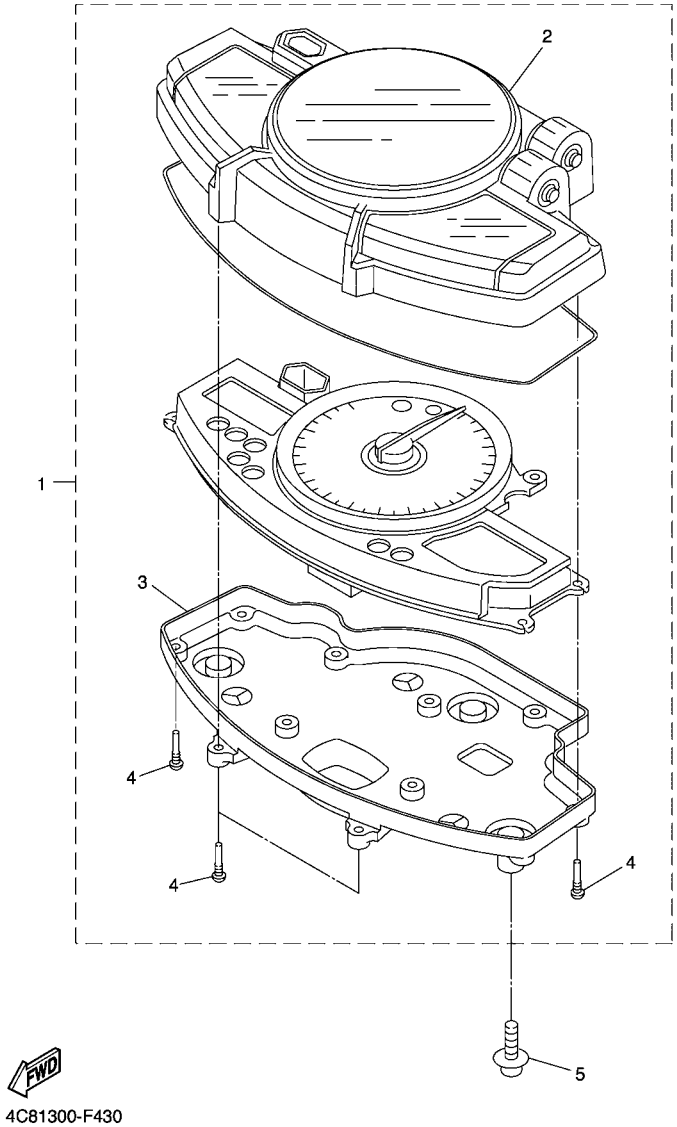

REF. NO.	PART NO.	DESCRIPTION	4C8B	4C8C	4C8D			REMARKS
1	4C8–83500–20	SPEEDOMETER ASSY (MPH)	1	1				
	4C8–83500–00	SPEEDOMETER ASSY (KM/H)			1			
2	4C8–8353E–00	.CASE, METER UPPER	1	1	1			
3	5VY–83572–01	.CASE, SPEEDOMETER LOWER	1	1	1			
4	5PW–8352S–00	.SCREW, PANEL FTTING	11	11	11			
5	90160–05006	SCREW, ROUND TAPPING	3	3	3			

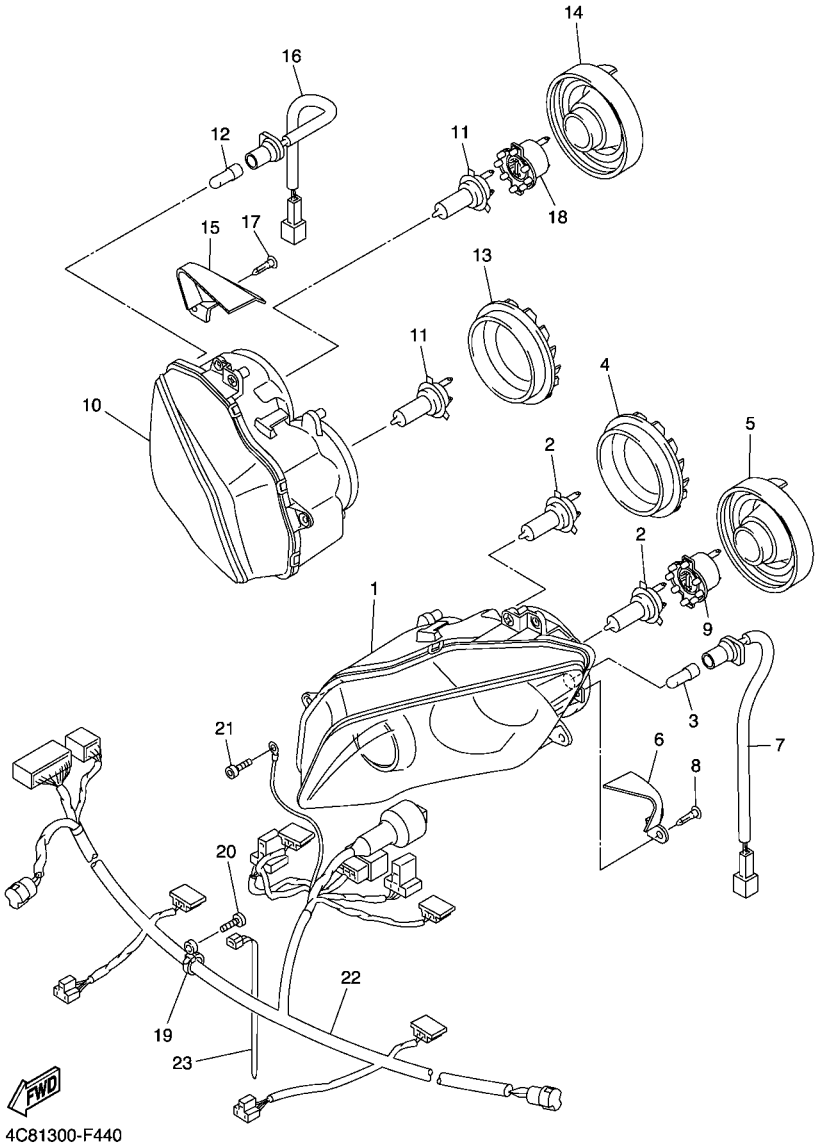

FIG. 44 HEADLIGHT

REF. NO.	PART NO.	DESCRIPTION	4C8B	4C8C	4C8D			REMARKS
1	4C8–84303–40	HEADLIGHT UNIT ASSY	1	1	1			
2	4SV–84314–00	BULB (12V-55W)	2	2	2			(H7)HALOGEN
3	4SV–84347–00	BULB (12V-5W)	1	1	1			
4	5SL–84397–00	COVER, SOCKET	1	1	1			
5	5GJ–84397–00	COVER, SOCKET	1	1	1			
6	4C8–84196–00	COVER, SOCKET	1	1	1			
7	4C8–84312–00	CORD ASSY	1	1	1			
8	90269–06008	RIVET	1	1	1			
9	4SV–84350–00	SOCKET CORD ASSY 2	1	1	1			
10	4C8–84303–50	HEADLIGHT UNIT ASSY	1	1	1			
11	4SV–84314–00	BULB (12V-55W)	2	2	2			(H7)HALOGEN
12	4SV–84347–00	BULB (12V-5W)	1	1	1			
13	5SL–84397–00	COVER, SOCKET	1	1	1			
14	5GJ–84397–00	COVER, SOCKET	1	1	1			
15	4C8–84396–00	COVER	1	1	1			
16	4C8–84312–00	CORD ASSY	1	1	1			
17	90269–06008	RIVET	1	1	1			
18	4SV–84350–00	SOCKET CORD ASSY 2	1	1	1			
19	90464–47002	CLAMP	2	2	2			
20	97702–50016	SCREW, TAPPING	2	2	2			
21	91312–05012	BOLT	1	1	1			
22	4C8–84359–10	CORD, HEADLIGHT	1	1				
	4C8–84359–20	CORD, HEADLIGHT			1			
23	90464–15195	CLAMP	1	1	1			

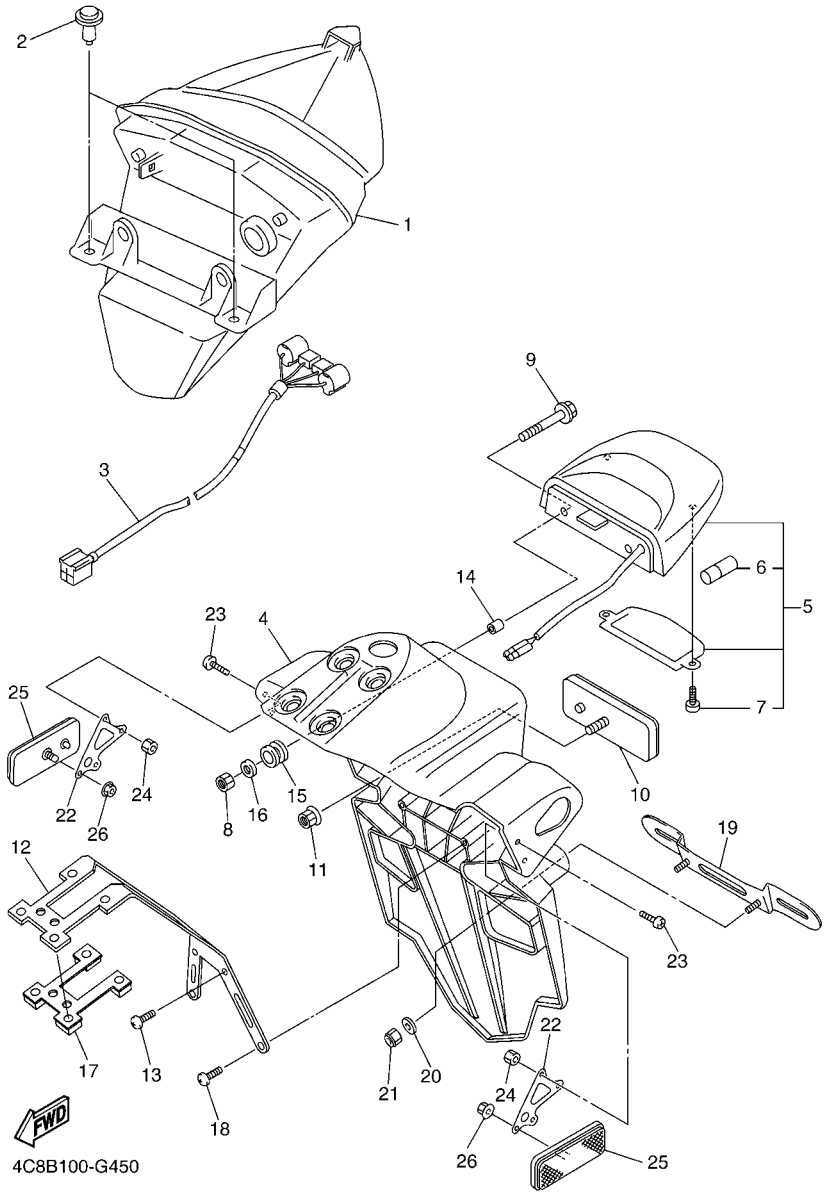

FIG. 45 TAILLIGHT

REF. NO.	PART NO.	DESCRIPTION	4C8B	4C8C	4C8D			REMARKS
1	4C8–84710–10	TAILLIGHT UNIT ASSY	1	1	1			
2	90269–06081	RIVET	2	2	2			
3	5PW–84717–00	CORD, TAILLIGHT	1	1	1			
4	4C8–21629–11	GUARD, MUD	1	1	1			
5	5VX–84745–01	LICENCE LIGHT UNIT ASSY	1	1	1			
6	4HC–84744–00	.BULB (12V-5W)	1	1	1			
7	97706–04012	.SCREW, TAPPING	2	2	2			
8	95602–05100	NUT, U	2	2	2			
9	90159–05011	SCREW, WITH WASHER	2	2	2			
10	3Y6–85130–02	REAR REFLECTOR ASSY	1	1	1			
11	95607–05200	NUT, U FLANGE	1	1	1			
12	4C8–2161G–00	BRACKET 6	1	1	1			
13	97707–50016	SCREW, TRUSS HEAD TAPPING	2	2	2			
14	90387–05003	COLLAR	2	2	2			
15	90480–11009	GROMMET	2	2	2			
16	92907–05200	WASHER	2	2	2			
17	5VY–2161G–00	BRACKET 6	1	1	1			
18	97707–50020	SCREW, TAPPING	2	2	2			
19	5MT–84751–00	BRACKET, LICENSE	1	1	1			
20	90201–06050	WASHER, PLATE	2	2	2			
21	95607–06100	NUT, U	2	2	2			
22	4C8–21688–00	BRACKET, REAR STAY	2	2	2			
23	90150–04041	SCREW, ROUND HEAD	4	4	4			
24	95607–04100	NUT, U	4	4	4			
25	3Y6–85130–02	REAR REFLECTOR ASSY	2	2	2			
26	95707–05500	NUT, FLANGE	2	2	2			

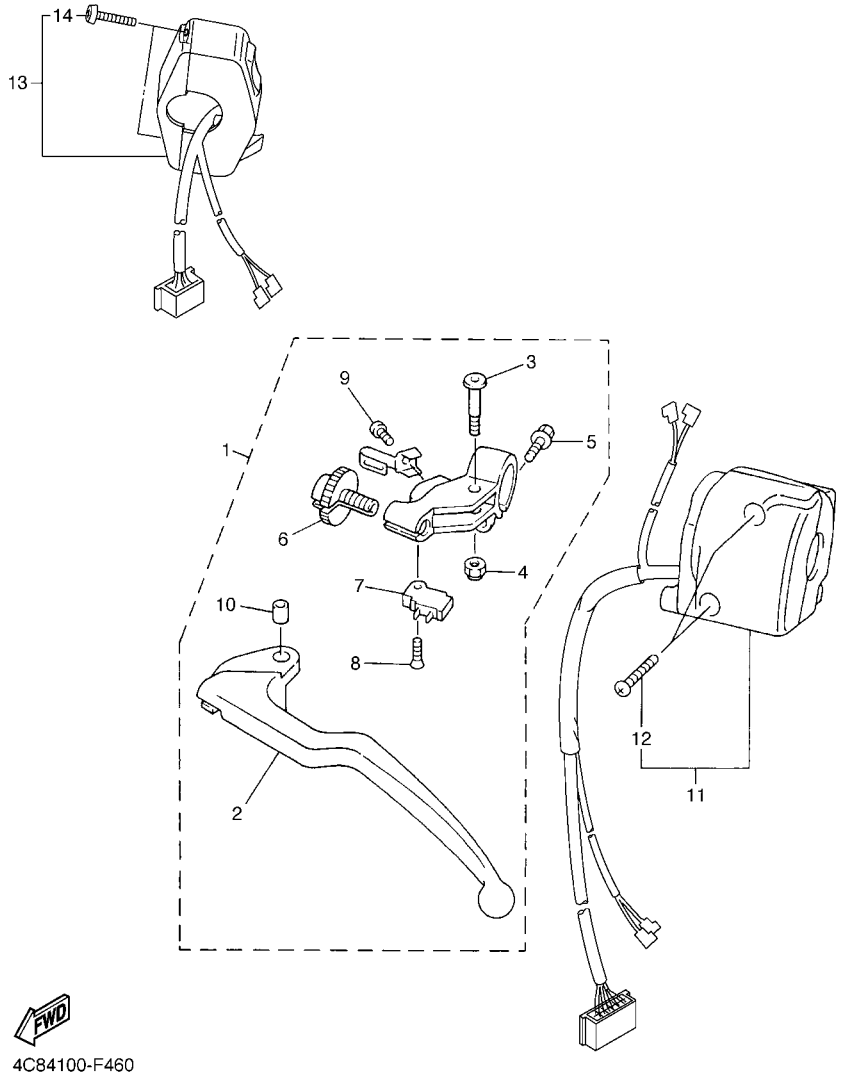

FIG. 46 HANDLE SWITCH & LEVER

REF. NO.	PART NO.	DESCRIPTION	4C8B	4C8C	4C8D			REMARKS
1	4XV–82910–15	LEVER HOLDER ASSY (LEFT)	1	1	1			
2	4XV–83912–11	.LEVER 1	1	1	1			
3	2C0–83945–00	.BOLT, LEVER	1	1	1			
4	95607–06200	.NUT, SELF U-FLANGE	1	1	1			
5	95027–06020	.BOLT, FLANGE	1	1	1			
6	5LV–83951–00	.BOLT, CABLE ADJUSTING	1	1	1			
7	4XV–82917–01	.SWITCH	1	1	1			
8	98707–03016	.SCREW, FLAT HEAD	1	1	1			
9	98507–04010	.SCREW, PAN HEAD	1	1	1			
10	5JJ–83913–00	.COLLAR, LEVER 1	1	1	1			
11	4C8–83973–00	SWITCH, HANDLE 3	1	1	1			
12	98507–05025	.SCREW, PAN HEAD	2	2	2			
13	4C8–83975–00	SWITCH, HANDLE 2	1	1	1			
14	98507–05022	.SCREW, PAN HEAD	2	2	2			

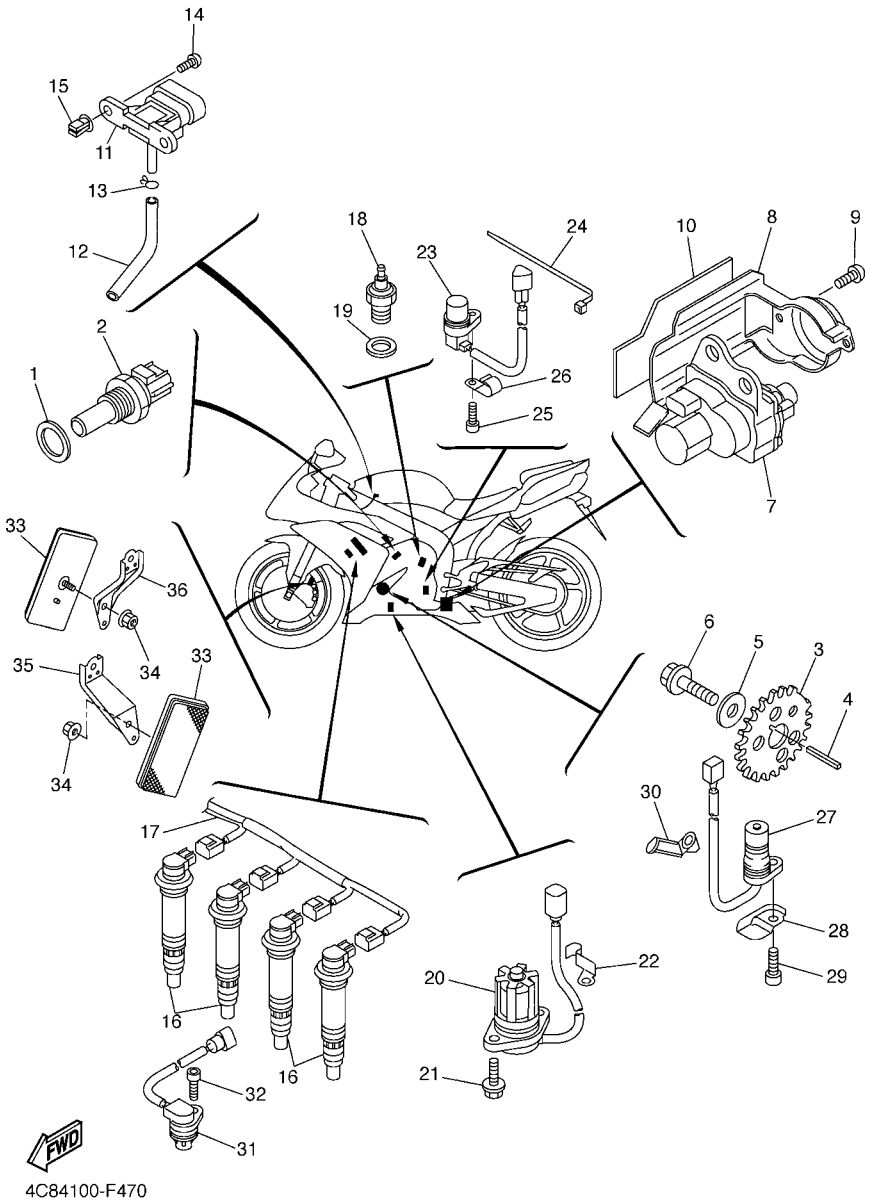

FIG. 47 ELECTRICAL 1

REF. NO.	PART NO.	DESCRIPTION	4C8B	4C8C	4C8D			REMARKS
1	90201–12790	WASHER, PLATE	1	1	1			
2	8CC–85790–01	THERMOSENSOR ASSY	1	1	1			
3	2D1–81673–00	ROTOR	1	1	1			
4	90282–03001	KEY, STRAIGHT	1	1	1			
5	90201–10039	WASHER, PLATE	1	1	1			
6	90105–10290	BOLT, FLANGE	1	1	1			
7	5VY–85820–10	SERVO MOTOR ASSY	1	1	1			
8	4C8–85829–01	COVER, SERVO MOTOR	1	1	1			
9	97702–50520	SCREW, TAPPING	2	2	2			
10	4C8–1479P–00	SEAT 5	1	1	1			
11	1C7–82380–00	SENSOR, PRESSURE	1	1	1			
12	90445–08028	HOSE	1	1	1			
13	90467–08021	CLIP	1	1	1			
14	97702–60520	SCREW, TAPPING	2	2	2			
15	90338–08226	PLUG	2	2	2			
16	4C8–82310–00	IGNITION COIL ASSY	4	4	4			
17	4C8–82309–00	WIRE, SUB LEAD	1	1	1			
18	3GB–82540–01	NEUTRAL SWITCH ASSY	1	1	1			
19	90430–10148	GASKET	1	1	1			
20	5VY–85720–00	OIL LEVEL GAUGE ASSY	1	1	1			
21	95022–06016	BOLT, FLANGE	2	2	2			
22	90465–08053	CLAMP	1	1	1			
23	4XV–83755–03	SENSOR, SPEED	1	1	1			
24	90464–51001	CLAMP	1	1	1			
25	90110–06161	BOLT, HEXAGON SOCKET HEAD	1	1	1			
26	90462–08057	CLAMP	1	1	1			
27	5VY–81670–01	PICK-UP ASSY	1	1	1			

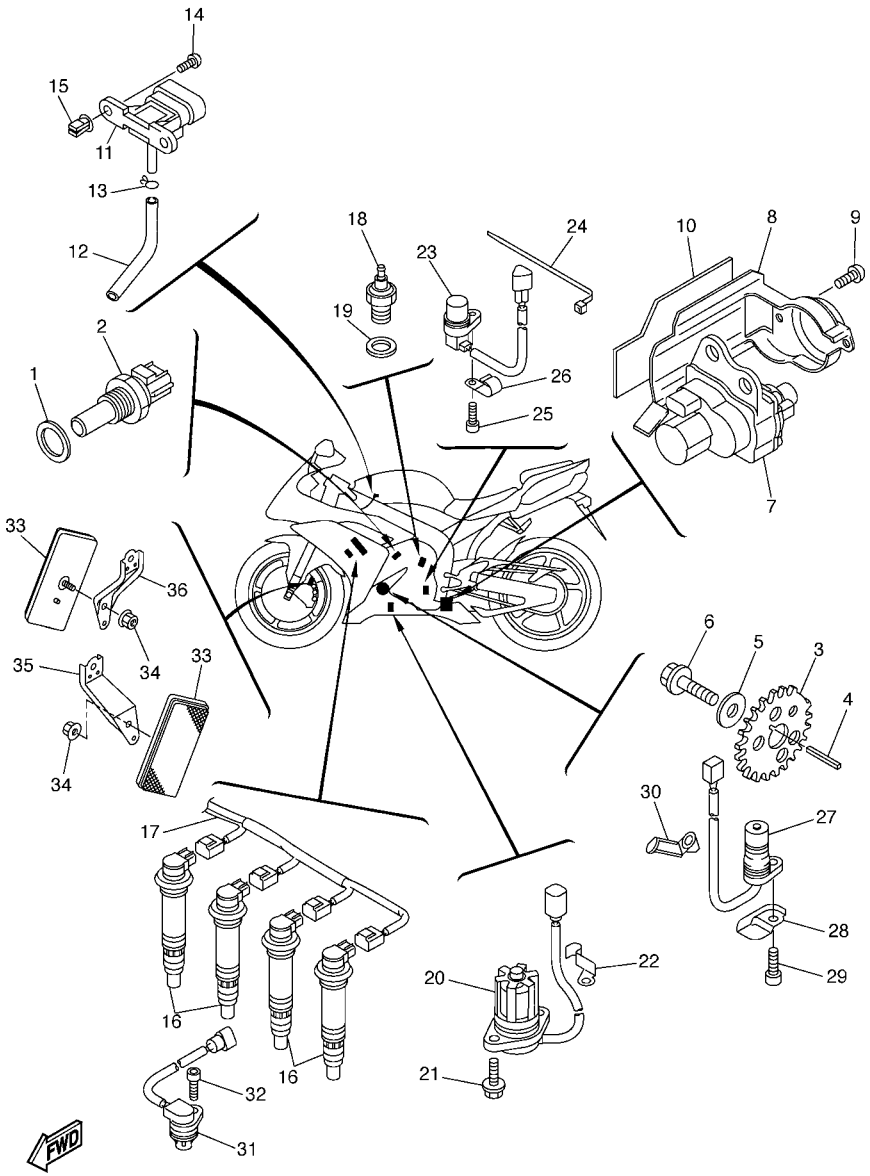

4C84100-F470

FIG. 47 ELECTRICAL 1

REF. NO.	PART NO.	DESCRIPTION	4C8B	4C8C	4C8D			REMARKS
28	4C8–15589–00	PLATE, CLUTCH COVER	1	1	1			
29	90110–06161	BOLT, HEXAGON SOCKET HEAD	1	1	1			
30	90465–08054	CLAMP	1	1	1			
31	5VY–85896–00	SENSOR, CAM POSITION	1	1	1			
32	90110–06175	BOLT, HEXAGON SOCKET HEAD	1	1	1			
33	11H–85110–01	REFLECTOR ASSY	2	2	2			
34	95707–05500	NUT, FLANGE	2	2	2			
35	5VY–85112–00	BRACKET, REFLECTOR 1	1	1	1			
36	5VY–85122–00	BRACKET, REFLECTOR 2	1	1	1			

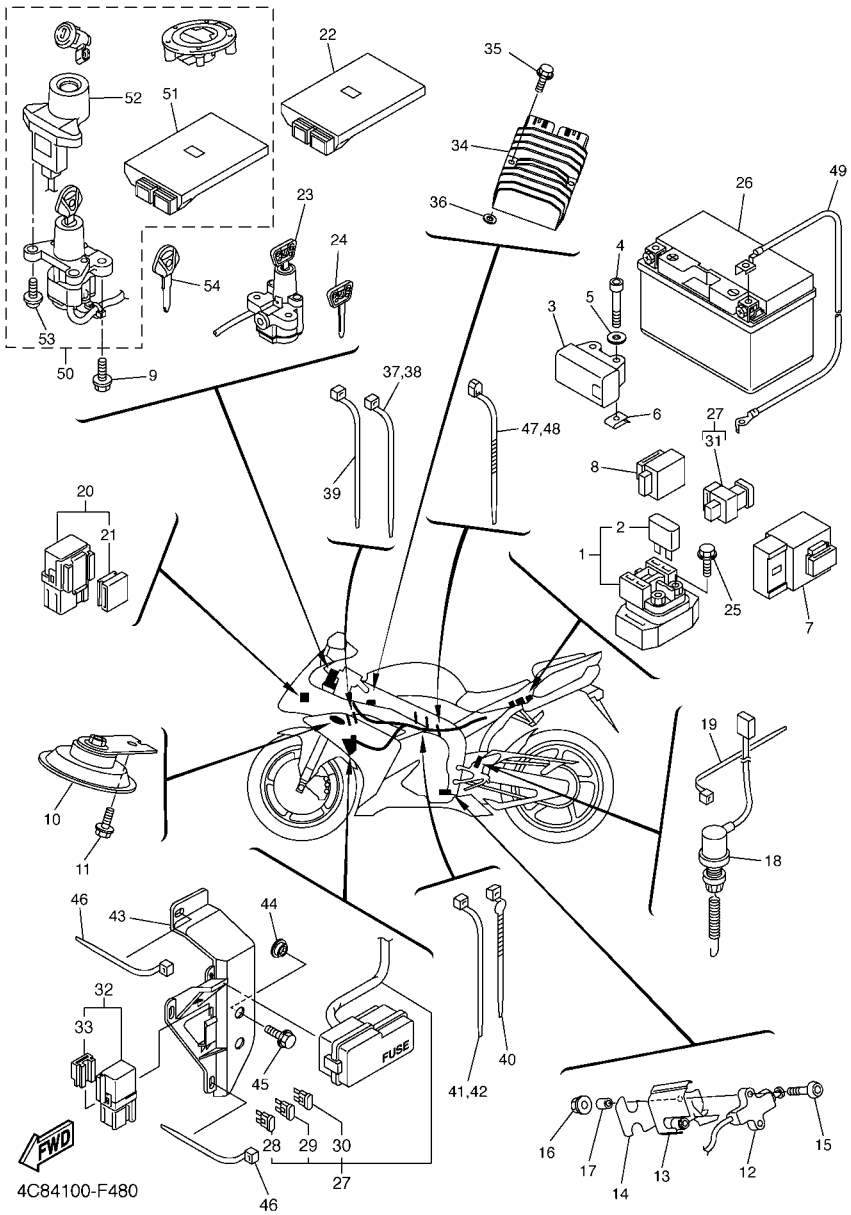

FIG. 48 ELECTRICAL 2

REF. NO.	PART NO.	DESCRIPTION	4C8B	4C8C	4C8D			REMARKS
1	1D0–81940–02	STARTER RELAY ASSY	1	1	1			
2	36Y–82151–00	.FUSE (15A-BL)	2	2	2			
3	5PS–82576–01	LEAN ANGLE SENSOR	1	1	1			
4	91312–04025	BOLT	2	2	2			
5	90201–047A2	WASHER, PLATE	2	2	2			
6	90183–04039	NUT, SPRING	2	2	2			
7	5VK–81950–30	RELAY ASSY	1	1	1			
8	4C8–83350–10	FLASHER RELAY ASSY	1	1	1			
9	90109–080G5	BOLT	2	2	2			
10	4TH–83371–00	HORN	1	1	1			
11	95807–06012	BOLT, FLANGE	1	1	1			
12	13S–82566–50	SWITCH, SIDE STAND	1	1	1			
13	4C8–27463–00	COVER 2	1	1	1			
14	4C8–2175P–00	SEAT 4	1	1	1			
15	92017–05035	BOLT, BUTTON HEAD	2	2	2			
16	95607–05200	NUT, U FLANGE	2	2	2			
17	90387–05025	COLLAR	2	2	2			
18	4C8–82530–00	STOP SWITCH ASSY	1	1	1			
19	90465–10098	CLAMP	1	1	1			
20	5JJ–81950–20	RELAY ASSY	2	2	2			
21	5JJ–81952–00	.HOLDER, RELAY	1	1	1			
22	4C8–8591A–60	ENGINE CONTROL UNIT ASSY	1	1				
23	4C8–82501–10	MAIN SWITCH STEERING LOCK	1	1				
24	4BH–82511–09	BLANK KEY	1	1				AP
25	95027–06008	BOLT, FLANGE	2	2	2			
26	5VY–82100–00	BATTERY ASSY (YUASA YTZ10S)	1	1	1			
27	4C8–82590–40	WIRE HARNESS ASSY	1	1				

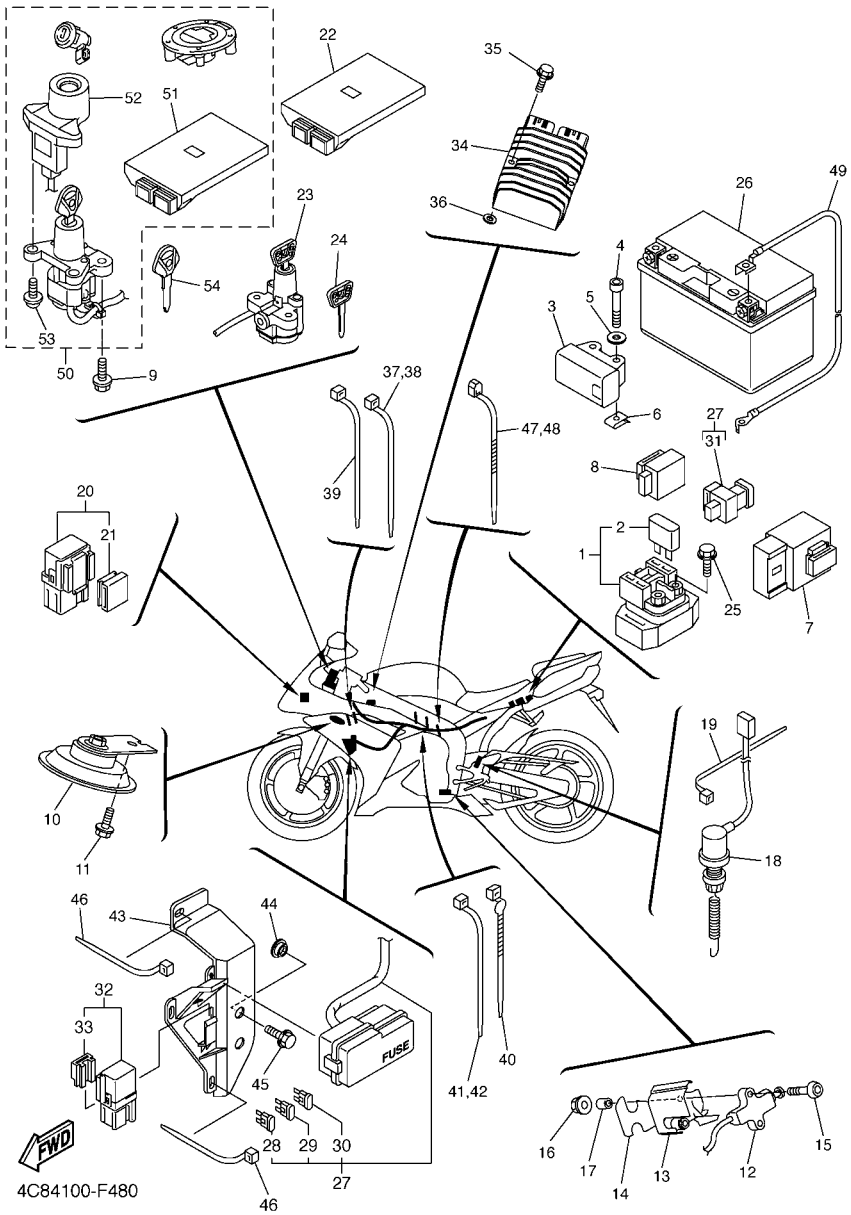

FIG. 48 ELECTRICAL 2

REF. NO.	PART NO.	DESCRIPTION	4C8B	4C8C	4C8D			REMARKS
27	4C8–82590–50	WIRE HARNESS ASSY			1			
28	5JJ–82151–70	.FUSE (25A-BL)	2	2	2			
29	5JJ–82151–10	.FUSE (15A-BL)	4	4	4			
30	5JJ–82151–00	.FUSE (7.5A-BL)	4	4	4			
31	5JW–82151–10	.FUSE (50A)	1	1	1			
32	5EA–81950–20	RELAY ASSY	1	1	1			
33	5EA–81952–00	.HOLDER, RELAY	1	1	1			
34	1D7–81960–00	RECTIFIER & REGULATOR ASSY	1	1	1			
35	95802–06025	BOLT, FLANGE	2	2	2			
36	90202–05187	WASHER, PLATE	2	2	2			
37	90464–15195	CLAMP	1	1	1			
38	90464–15195	CLAMP	1	1	1			
39	90464–13077	CLAMP	1	1	1			
40	90465–10098	CLAMP	1	1	1			
41	1UA–82591–00	BAND	1	1	1			
42	1UA–82591–00	BAND	1	1	1			
43	4C8–82171–00	STAY, FUSE BOX	1	1	1			
44	90387–06040	COLLAR	2	2	2			
45	90119–06228	BOLT, WITH WASHER	2	2	2			
46	90464–13077	CLAMP	4	4	4			
47	90464–13073	CLAMP	1	1	1			
48	90464–13073	CLAMP	1	1	1			
49	4C8–82116–00	WIRE, MINUS LEAD	1	1	1			
50	4C8–W8250–A0	MAIN SW. IMMOBILIZER KIT			1			
51	4C8–8591A–A0	.ENGINE CONTROL UNIT ASSY			1			
52	4C8–8255P–10	.IMMOBILIZER. UNIT COMP.			1			
53	5SL–82113–01	.SCREW			2			

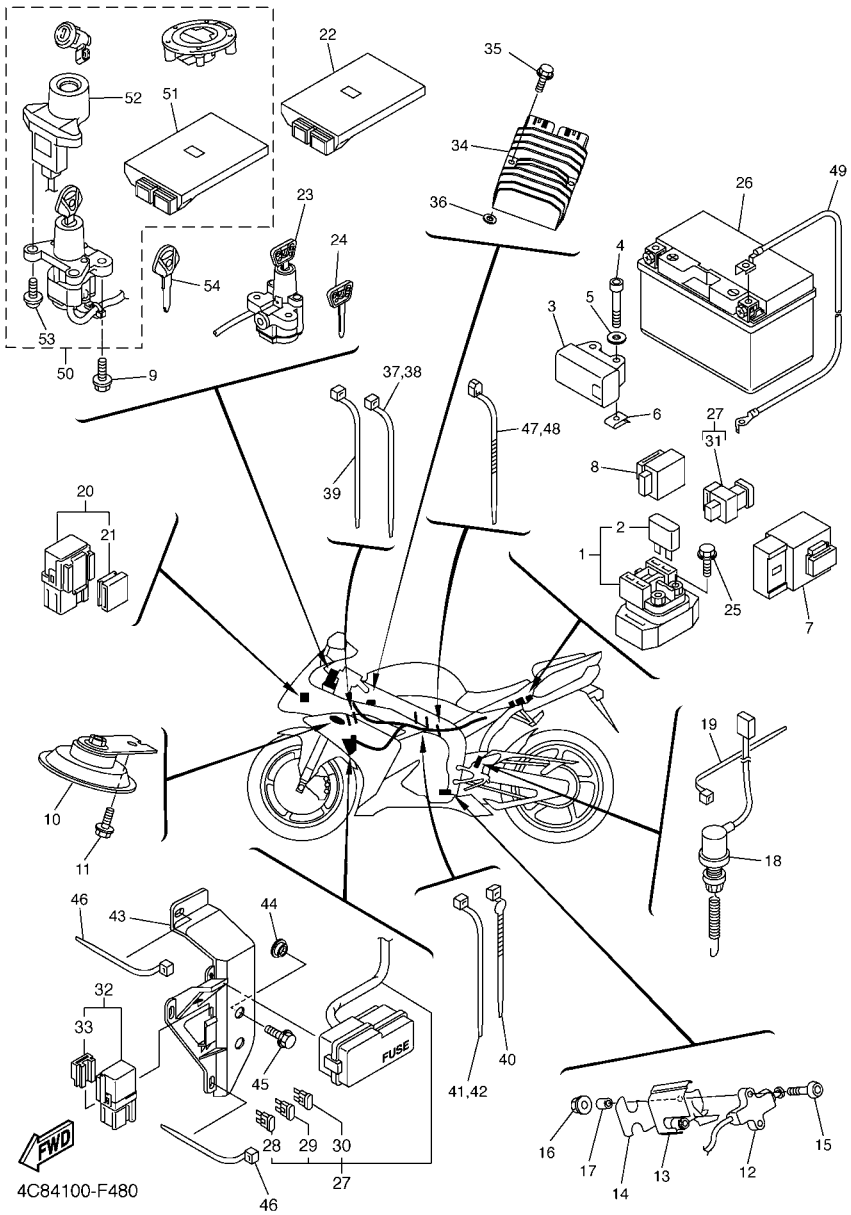

FIG. 48 ELECTRICAL 2

REF. NO.	PART NO.	DESCRIPTION	4C8B	4C8C	4C8D			REMARKS
54	5SL–82511–08	BLANK KEY			1			AP

NUMERICAL INDEX

PART NO.	GRID NO.
4C8–11101–00	B – 2
5VY–1111G–00	B – 2
4C8–11133–10	B – 2
4C8–11134–10	B – 2
5VY–11165–00	C – 11
4C8–11181–00	B – 2
4C8–11191–00	B – 2
4C8–11193–00	B – 2
214–11198–01	B – 14
5VY–11311–10	B – 4
4C8–1133E–01	C – 8
4C8–1133F–01	C – 8
5VY–11351–00	B – 4
4C8–11411–00	B – 5
5VY–11416–00	B – 5
5VY–11416–10	B – 5
5VY–11416–20	B – 5
5VY–11416–30	B – 5
5VY–11416–A0	B – 5
5VY–11445–00	C – 13
5VY–11478–00	C – 13
2D1–11537–00	C – 13
5VY–11549–00	B – 5
4C8–11603–00	B – 5
4C8–11631–00	B – 5
4C8–11633–00	B – 5
4C8–11650–00	B – 5
5VY–11654–01	B – 5
4C8–11656–00	B – 5
4C8–11656–10	B – 5
4C8–11656–20	B – 5
4C8–11656–30	B – 5
4C8–12111–00	B – 6
4C8–12113–00	B – 6
4C8–12114–00	B – 6
4C8–12116–00	B – 6
4C8–12117–00	B – 6
1AA–12118–00	B – 6
1WG–12118–00	B – 6
4SV–12119–00	B – 6
4C8–12121–00	B – 6
4C8–12127–00	B – 6
3P6–12129–00	B – 6
4C8–12153–09	B – 7
4C8–12153–20	B – 7
4C8–12153–30	B – 7
3LD–12168–K1	B – 6
3LD–12168–M1	B – 6

PART NO.	GRID NO.
3LD–12168–R1	B – 6
3LD–12168–U1	B – 6
3LD–12168–W1	B – 6
3LD–12168–Y1	B – 6
3LD–12169–11	B – 6
3LD–12169–31	B – 6
3LD–12169–50	B – 6
3LD–12169–70	B – 6
3LD–12169–90	B – 6
3LD–12169–E0	B – 6
3LD–12169–G0	B – 6
3LD–12169–J0	B – 6
3LD–12169–L0	B – 6
3LD–12169–N0	B – 6
3LD–12169–T0	B – 7
4C8–12170–00	B – 8
4C8–12176–00	B – 8
4C8–12180–00	B – 8
4C8–12210–00	B – 8
2D1–12213–00	B – 8
5BE–12241–00	B – 2
4C8–12251–00	B – 8
4C8–12252–00	B – 8
5VY–12277–00	E – 3
4C8–12405–00	B – 11
4C8–12405–10	B – 11
5VY–12410–10	B – 11
5LP–12411–00	B – 11
4C8–12420–00	B – 9
5VY–12422–00	B – 9
4C8–12438–00	B – 9
4XV–12439–00	B – 9
4C8–1243A–00	B – 11
4C8–1243F–00	B – 12
4C8–12443–00	C – 11
5VY–12450–10	B – 9
5VY–12456–10	B – 9
4C8–12461–00	B – 11
5SL–12462–00	B – 12
5VY–12469–00	B – 9
5GV–1246A–00	B – 11
5VY–12481–10	B – 10
4C8–12484–00	B – 10
4C8–12485–00	B – 11
4XV–12485–00	B – 9
4C8–12551–00	B – 11
4C8–12552–00	B – 11
5VY–12576–00	B – 9

PART NO.	GRID NO.
4C8–12577–00	B – 11
4C8–12579–00	B – 11
5VY–12588–00	B – 10
4C8–12589–00	B – 12
5VY–12637–00	B – 9
4C8–12659–00	B – 12
4C8–12668–00	B – 12
5GJ–12675–00	B – 11
4C8–12682–00	B – 15
5EB–12822–00	B – 14
5VY–13117–10	B – 13
5VY–13161–00	B – 14
5VY–1316E–00	B – 13
5VY–13310–10	B – 9
5VY–13336–00	B – 9
5VY–13354–00	C – 15
5VY–13355–00	B – 9
4C8–13410–00	B – 13
4C8–13414–00	B – 14
5VY–13416–00	B – 13
4C8–13417–00	B – 14
5VY–13418–10	C – 9
5GH–13440–20	B – 14
5VY–13470–00	B – 14
5JW–13473–00	B – 14
5EB–13475–00	B – 14
5VY–13490–00	B – 14
8FP–13556–00	C – 3
4C8–13595–00	B – 15
4C8–13596–00	B – 15
4C8–13598–00	B – 15
4C8–13750–20	C – 3
4C8–13750–30	C – 3
4C8–13761–00	C – 3
2C0–13881–00	B – 15
5VY–13898–00	B – 13
4C8–13907–00	E – 6
4C8–13930–00	C – 3
4C8–13971–00	C – 4
2C0–14105–00	C – 3
4KM–14137–00	C – 3
8A7–14139–00	C – 3
5PS–14147–00	C – 3
895–14169–00	C – 3
2C0–14216–00	C – 3
5FL–14216–00	C – 3
8CC–14216–10	C – 3
3XV–14251–00	C – 3

PART NO.	GRID NO.
5FL–14349–10	C – 3
5JW–14396–00	C – 3
4C8–1440B–00	B – 15
4C8–14411–00	B – 15
4C8–14421–00	B – 15
4C8–1443J–00	C – 4
4C8–14451–00	B – 15
4C8–14452–00	B – 15
4C8–14457–00	B – 15
4C8–14462–00	B – 15
4C8–14465–10	C – 3
4C8–14466–10	C – 3
4C8–14467–00	B – 15
4C8–14490–00	B – 15
4C8–14498–00	B – 15
4C8–14602–00	C – 6
4C8–14610–00	C – 6
4FM–14613–00	C – 6
4C8–14615–00	C – 6
5VY–14623–00	C – 6
5VY–14638–00	C – 6
5VY–14643–00	C – 6
5VY–14648–00	C – 6
5VY–14674–00	C – 6
4C8–14710–10	C – 7
5VY–14714–00	C – 7
3D8–14715–00	C – 7
4C8–14715–00	C – 6
5VY–14715–00	C – 7
4C8–14718–00–P0	C – 8
4C8–14720–10	C – 7
4C8–14728–00–P0	C – 8
4C8–14738–00	C – 6
4C8–14740–00	C – 6
5VY–14747–00	C – 7
4C8–14755–00	C – 6
4C8–14757–00	C – 8
5VY–14757–00	D – 11
4C8–1475P–00	C – 8
4C8–1476P–00	C – 8
4C8–1479P–00	G – 7
5VY–14811–00	C – 6
5VY–14816–00	C – 6
5VY–14821–00	C – 6
5VY–14826–00	C – 6
5VY–1482K–00	B – 2
4C8–14840–00	C – 5
5VY–14856–00	C – 6

PART NO.	GRID NO.
5VY–14865–10	C – 6
5VY–14867–00	C – 6
4C8–14881–00	C – 5
4C8–14882–00	C – 5
4C8–14883–00	C – 5
5SL–14890–10	B – 2
5VY–14899–00	B – 2
5JW–14987–00	C – 3
4C8–15100–00	C – 9
4B1–15113–00	C – 11
5EB–15155–00	C – 9
5VY–15163–00	D – 2
5VY–15164–00	C – 10
36Y–15189–00	C – 11
4H7–15189–00	C – 11
5PX–15189–00	C – 10
4C8–15191–00	F – 14
4C8–15199–00	C – 11
5VY–15316–00	C – 9
5PW–15361–00	C – 9
3F9–15362–00	C – 10
4C8–15393–00	B – 15
5VY–15411–00	C – 10
5VY–15413–00	C – 11
5VY–15416–00	C – 10
4C8–15418–00	C – 10
4C8–15421–00	C – 10
4C8–15431–00	C – 11
4C8–15441–00	C – 11
2D1–15451–10	C – 10
4C8–15456–00	C – 11
4C8–15461–00	C – 10
4C8–15462–00	C – 11
5VY–15499–00	C – 10
5VY–15515–00	C – 13
5VY–15517–00	C – 13
5VY–15521–00	C – 13
5VY–15542–00	C – 10
4C8–15544–00	C – 10
5VY–15570–00	C – 13
5VY–15586–00	C – 13
4C8–15589–00	G – 8
4C8–16150–00	C – 14
4C8–16154–00	C – 14
5VY–16155–00	C – 13
5VY–16164–00	C – 15
5VY–16181–00	C – 15
5VY–16321–00	C – 14

PART NO.	GRID NO.
4B1–16324–00	C – 14
4B1–16325–00	C – 14
5VY–16325–00	C – 14
5VY–16330–00	C – 14
5VY–16331–00	C – 14
4C8–16340–00	C – 15
132–16346–00	D – 5
4C8–16351–00	C – 14
4XV–16356–01	C – 15
4C8–16360–00	C – 14
4C8–16370–10	C – 14
4C8–16377–00	C – 15
2D1–16382–00	C – 14
4B1–16383–00	C – 14
4B1–16384–00	C – 14
5VY–16384–00	C – 14
2C0–16539–00	C – 14
2D1–17121–10	D – 2
2D1–17131–00	D – 2
4C8–17151–00	D – 2
4C8–17161–00	D – 2
5VY–17211–00	D – 3
4C8–17221–00	D – 2
5VY–17231–00	D – 3
5VY–17241–00	D – 2
4C8–17251–00	D – 3
4C8–17261–00	D – 2
4C8–17402–00	D – 2
4C8–17411–00	D – 2
5VY–17442–00	D – 2
5VY–17446–00	D – 2
4C8–17460–00	D – 3
4C8–18101–00	D – 5
5VY–18110–00	D – 5
5VY–18112–00	D – 5
5EB–18113–00	D – 5
5VY–18115–00	D – 5
5LV–18116–00	D – 5
5VY–18127–10	D – 5
5VY–18140–00	D – 5
5VY–18144–00	D – 5
4XV–18154–00	D – 5
5VY–18511–01	D – 4
2D1–18512–00	D – 4
5VY–18513–01	D – 4
5VY–18531–00	D – 4
5VY–18535–00	D – 4
5VY–18536–00	D – 4

NUMERICAL INDEX

PART NO.	GRID NO.
5VY–18540–00	D – 4
136–18542–00	D – 4
5VY–18562–00	D – 4
4C8–2110L–00	D – 7
4C8–2110M–10	D – 7
4C8–2110N–00	D – 7
4C8–2110P–00	D – 7
4C8–21110–01	D – 6
4C8–21110–11	D – 6
4C8–2111D–00	D – 6
4C8–2112B–00	D – 7
5VY–21131–00	D – 7
4C8–2113B–00	D – 7
4C8–2113C–00	D – 7
4C8–2113D–00	D – 8
4C8–2116J–00	D – 6
5VY–2117K–01	E – 9
4C8–2117M–00	D – 7
4C8–2117T–00	D – 9
4C8–2117V–00–P0	F – 10
4C8–2117V–00–P1	F – 10
4C8–2117V–00–P2	F – 10
4C8–2117V–00–P3	F – 10
4C8–2117W–00–P0	F – 11
4C8–2117W–00–P1	F – 11
4C8–2117W–00–P2	F – 11
4C8–2117W–00–P3	F – 11
4C8–21183–00	D – 7
4C8–2118K–00	E – 8
4C8–2118K–10	E – 8
4C8–21190–00	D – 6
5VY–21268–00	D – 6
5VY–21269–00	D – 6
4XV–21376–00	D – 9
4C8–2139X–00	D – 7
4B1–21414–00	D – 6
4B1–21424–00	D – 6
4C8–2144G–00	F – 4
4C8–21486–00	F – 5
4C8–21488–00	F – 5
4C8–21495–00	D – 6
5PW–21511–00–P0	D – 9
5PW–21511–00–P1	D – 9
5PW–21511–00–P3	D – 9
5PW–21511–00–P6	D – 9
4C8–2153A–00	F – 12
4C8–2153E–60	F – 12
4C8–2153E–70	F – 12

PART NO.	GRID NO.
4C8–2153E–80	F – 11
2C0–21566–00	D – 14
4C8–21611–00–P0	D – 9
4C8–21611–00–P1	D – 9
4C8–21611–00–P2	D – 10
4C8–21611–00–P3	D – 10
4C8–2161G–00	G – 5
5VY–2161G–00	G – 5
4C8–21629–11	G – 5
2MG–21639–00	F – 13
4C8–21639–00	D – 10
4C8–2163A–00	D – 10
4C8–2163E–00	D – 10
4C8–21649–00	D – 9
4C8–2164F–00	D – 10
4C8–2164K–00	D – 10
4C8–2164L–00	D – 10
4C8–21650–00	D – 14
4C8–21652–00	D – 10
5VY–21668–00	D – 14
5VY–21668–10	D – 14
5VY–21669–00	D – 10
5VX–21684–00	C – 2
5PW–21686–01	C – 2
4C8–21688–00	G – 5
4C8–21710–00–P0	D – 12
4C8–21710–00–P1	D – 12
4C8–21710–00–P2	D – 12
4C8–21710–00–P3	D – 12
4C8–2171A–00–P0	E – 6
4C8–2171A–00–P2	E – 6
4C8–2171A–00–P5	E – 6
4C8–2171A–00–P6	E – 6
1FK–2171H–00	F – 8
4C8–2172P–00	D – 12
5PW–21732–00	D – 10
5VY–21732–00	D – 10
4C8–21735–00	D – 10
4C8–2173P–00	D – 12
4C8–21746–00	D – 7
4C8–21747–00	D – 12
5TA–21749–00	F – 11
4C8–2174X–00	D – 7
5PW–2174X–00	D – 12
4C8–2174Y–00	D – 7
2TK–21757–00	F – 11
4C8–2175P–00	G – 9
4C8–2176P–10	C – 2

PART NO.	GRID NO.
5VY–2176V–00	E – 9
4C8–21773–00	D – 7
5PW–2177L–00	F – 7
	F – 10
2C0–2178A–00	C – 2
4C8–2179W–10	C – 2
4C8–21816–00	B – 12
26H–21828–00	B – 12
4C8–21871–00	B – 12
2C0–21875–00	B – 12
4C8–21880–00	C – 7
4C8–21890–00	C – 7
4C8–22110–10	D – 13
4C8–22127–00	D – 15
4C8–22128–00	D – 13
5VY–22128–00	D – 13
4C8–22141–00	D – 14
4C8–22151–00	D – 13
4C8–2217A–00	D – 13
4C8–2217M–00	D – 13
4C8–22184–00	D – 13
4C8–22210–10	D – 15
4C8–22210–20	D – 15
4C8–22210–40	D – 15
4C8–22210–50	D – 15
4C8–22210–70	D – 15
4C8–22210–80	D – 15
4C8–22219–00	D – 15
4C8–22252–00	D – 14
5VY–22311–01	D – 13
4C8–23102–00	E – 3
4C8–23102–10	E – 3
4C8–23103–00	E – 3
4C8–23103–10	E – 3
4C8–23110–00	E – 3
4C8–23111–00	E – 3
5VY–23118–00	E – 3
4C8–23120–00	E – 4
4C8–23136–00	E – 3
4C8–23136–10	E – 3
4C8–23141–00	E – 3
4PU–23144–00	E – 3
4PU–23145–01	E – 3
5PW–23146–00	E – 3
3XJ–23147–L0	E – 3
4C8–23149–00	E – 3
4V4–23153–L0	E – 3
509–23158–L0	E – 3

PART NO.	GRID NO.
4C8–23170–00	E – 3
5UX–23181–00	E – 3
4C8–23340–00	E – 4
3SP–23357–L0	E – 3
4C8–23377–00	E – 2
5VY–23389–00	E – 15
4XV–23415–01	E – 2
4XV–23418–00	E – 2
4XV–2341B–00	E – 2
4XV–23434–00	E – 15
4C8–23435–00	E – 2
4C8–23435–10	E – 2
3FV–23462–00	E – 2
2H9–23469–00	E – 15
5PW–23472–00	E – 4
5VY–23490–00	E – 15
5VY–23495–00	E – 15
4C8–23808–00	E – 2
5PW–2411J–01	E – 7
4C8–24121–00	D – 8
4C8–24122–00	D – 8
4C8–24129–00	E – 6
4C8–24139–00	E – 7
5SL–2413B–00	E – 5
4C8–2413Y–00	E – 5
4C8–2414H–00	E – 7
4C8–2414J–00	E – 6
4C8–2414K–00	E – 7
4C8–2414N–00	E – 7
5VY–2414N–00	E – 6
4C8–2414P–00	E – 7
5VY–2414P–00	E – 6
5VY–2414R–00	E – 7
5VY–24170–00	E – 7
5RB–24180–00	E – 7
4FM–24181–00	C – 7
5VY–24181–00	E – 5
2C0–24182–00	D – 6
4C8–24182–00	E – 6
4C8–24183–00	E – 8
5SL–24183–00	E – 5
5VY–24183–00	E – 5
5VY–24191–00	E – 5
5VY–24192–00	E – 5
4C8–2419F–00	E – 7
4C8–24216–00	E – 7
4C8–24244–20	E – 5
4C8–24245–10	E – 5

PART NO.	GRID NO.
4C8–24245–20	E – 5
5VY–24312–00	E – 6
4C8–24313–00	E – 7
4C8–24314–00	E – 7
4C8–24316–00	E – 6
68V–24376–00	C – 3
5JW–24486–00	E – 6
4C8–24491–00	E – 6
5JJ–24602–00	E – 5
4C8–24710–00	E – 9
4C8–24710–10	E – 9
4C8–24711–00	E – 9
4C8–24711–10	E – 9
5SL–24723–00	E – 9
5VY–24729–00	E – 9
4C8–24750–00	E – 9
4C8–24750–10	E – 9
4C8–24751–00	E – 9
4C8–24751–10	E – 9
5VY–24780–01	E – 9
5VY–2478E–00	E – 9
5VY–24792–00	E – 9
3TB–24877–A0	D – 8
3TB–24877–B0	D – 8
4XV–25117–00	E – 10
4XV–25118–00	E – 10
5VY–25168–00–0X	E – 10
5VY–25168–00–98	E – 10
5VY–25168–00–P2	E – 10
2C0–25181–00	E – 10
4XV–25186–00	E – 10
5PW–25188–00	E – 10
5PW–25317–00	E – 12
5VY–25338–00–0X	E – 12
5VY–25338–00–98	E – 12
5VY–25338–00–P2	E – 12
2C0–25364–00	E – 12
5SL–25366–00	E – 12
5PW–25367–00	E – 12
5SL–25367–00	E – 12
5SL–25376–00	E – 12
5PW–25377–00	E – 12
4C8–25381–00	E – 13
4XV–25383–00	E – 12
4C8–25388–00	E – 13
5VY–25389–00	E – 13
5MT–25398–00	E – 10
	E – 12

PART NO.	GRID NO.
5MT–25398–10	E – 10
	E – 12
5MT–25398–20	E – 10
	E – 12
5VY–25445–20	E – 12
4C8–2580T–01	E – 11
4C8–2580U–01	E – 11
5VY–2580W–11	E – 14
4C8–2581T–00	E – 11
5SL–25827–00	E – 14
5SL–25827–10	E – 14
5SL–25828–01	E – 14
2D1–2582A–00	F – 6
5SL–2582W–00	E – 14
5SL–25838–00	E – 14
5VY–2583B–00	E – 11
4C8–2583V–00	F – 6
5SL–25852–00	F – 6
5VY–25852–00	F – 2
5SL–25854–00	F – 6
5VY–25854–00	F – 2
5SL–25855–00	F – 6
5VY–25855–00	F – 2
4BP–2585F–00	F – 6
5VS–2585H–00	F – 2
5VS–25867–00	F – 2
5VS–2586F–00	F – 2
4C8–25872–00	F – 2
4C8–25874–00	F – 6
5VY–25875–00	F – 2
5VY–25876–00	F – 2
4C8–2588F–00	F – 6
2D1–25894–00	F – 6
5SL–25894–20	F – 2
4C8–25895–00	F – 6
5VY–25895–10	F – 2
5VY–2589F–01	F – 2
5VY–2589G–00	F – 2
5VY–2589H–00	F – 2
5SL–25914–00	E – 14
5DH–25916–00	E – 14
3JD–25917–00	E – 14
5SL–25917–00	E – 14
4C8–25919–00	E – 11
5SL–25919–00	E – 14
4C8–25919–11	E – 11
5VY–25921–00	E – 14
4SV–25924–00	E – 11

NUMERICAL INDEX

PART NO.	GRID NO.
8CR–25924–00	E – 14
3GM–25925–00	E – 11
5SL–25926–00	E – 14
5VY–25975–00	F – 2
5VY–26121–00	E – 15
5VY–26122–00	E – 15
4C8–26240–00	E – 15
2C0–26241–00	E – 15
5PW–26246–00	E – 15
4C8–26280–00	F – 9
5VY–26281–00	E – 15
3XW–26282–01	E – 15
4C8–26290–00	F – 9
5VY–26292–11	E – 2
4C8–26298–00	F – 9
4C8–26302–00	E – 15
5VS–26332–00	F – 2
4C8–26335–00	E – 15
5VY–26398–00	E – 15
4C8–27211–00	F – 6
5SL–27222–00	F – 6
5VY–27311–01	F – 3
5JJ–27315–00	F – 3
5JJ–27321–00	F – 3
4NX–27351–00	F – 3
5PW–27352–00	F – 3
4C8–27406–00	D – 11
5VY–27410–00	F – 3
5VY–2741L–00	F – 4
5VY–27424–00	C – 7
5VY–2742L–00	F – 4
5JJ–27431–00	F – 4
4C8–27434–00	F – 6
5JJ–27437–01	F – 4
5JJ–27441–00	F – 4
5VY–27442–01	F – 3
4C8–27443–00	F – 3
4C8–27445–00	F – 3
4C8–27446–00	F – 4
5JJ–27461–00	F – 3
4C8–27463–00	G – 9
4C8–27490–01	F – 5
4C8–27498–00	D – 11
4C8–27499–00	D – 11
4C8–2749A–00	F – 5
4C8–2749B–00	F – 5
4C8–2749D–00	F – 5
4C8–2749D–10	F – 5

PART NO.	GRID NO.
4C8–27813–00	F – 6
4C8–28100–00	D – 11
4C8–28217–00	F – 10
4C8–28219–00	F – 10
4C8–28229–00	F – 10
4C8–28328–20	F – 9
4C8–2832P–00	F – 7
4C8–28336–00	F – 8
4C8–28345–00	F – 7
4C8–28346–00	F – 7
4C8–2834C–00	F – 10
4C8–2834C–10	F – 10
4C8–2834E–00	F – 8
4C8–2834F–00	F – 8
5VY–2834V–00	F – 8
4C8–28356–00	F – 8
4C8–2835G–00–P0	F – 7
4C8–2835G–00–P1	F – 7
4C8–2835G–00–P2	F – 7
4C8–2835G–00–P3	F – 7
5JW–2835Y–00	F – 7
5JW–2835Y–10	F – 7
4C8–2836A–00	F – 12
4KN–2836B–00	D – 12
4C8–2836E–00	F – 12
4C8–2836F–01	F – 13
4C8–2836G–01	F – 13
4C8–2836K–00	F – 11
4C8–2836L–00	F – 11
4C8–2836M–00	F – 12
4C8–28371–00	F – 8
4C8–28372–00	F – 8
5GM–28379–00	D – 11
4C8–2837J–00	F – 11
4C8–2837L–00	F – 8
4C8–2837M–00	F – 8
4C8–2837N–00	F – 7
4C8–2837R–00	F – 7
4C8–2837V–00	F – 9
4C8–2837W–00	F – 9
5PW–28386–00	F – 11
4C8–2838N–00–P1	F – 8
4C8–2838N–00–P3	F – 8
4C8–2838N–00–P5	F – 8
4C8–2838R–00–P1	F – 8
4C8–2838R–00–P3	F – 8
4C8–2838R–00–P5	F – 8
4C8–2838T–00	F – 8

PART NO.	GRID NO.
4C8–2838U–00	F – 8
4C8–28391–40	F – 10
4C8–28391–60	F – 10
4C8–28392–40	F – 11
4C8–28392–60	F – 11
4C8–28415–00	F – 11
4C8–28416–00	F – 11
4C8–28425–00	F – 10
4C8–28428–00	F – 7
4C8–28429–00	F – 7
4C8–28435–00	F – 10
3JJ–28446–A1	D – 10
3JJ–28446–B1	D – 10
4C8–2844E–00	F – 7
4C8–2846F–00	F – 7
4C8–2847F–00	F – 7
4C8–2847N–00	F – 10
4C8–2848F–00	F – 7
4C8–2848L–00	F – 11
4C8–2848M–00	F – 12
4C8–2848P–00	F – 12
2D1–81410–01	F – 14
5VY–81450–00	F – 14
5VY–81670–01	G – 7
2D1–81673–00	G – 7
4C8–81801–01	F – 15
4C8–8183G–00	F – 15
4C8–81846–00	F – 15
4C8–81861–00	F – 15
4C8–81890–01	F – 15
1D0–81940–02	G – 9
5EA–81950–20	G – 10
5JJ–81950–20	G – 9
5VK–81950–30	G – 9
5EA–81952–00	G – 10
5JJ–81952–00	G – 9
1D7–81960–00	G – 10
5VY–82100–00	G – 9
5SL–82113–01	G – 10
4C8–82116–00	G – 10
4C8–82122–00	D – 9
4C8–8212B–00	D – 9
4C8–8212C–00	D – 9
133–82131–00	D – 9
36Y–82151–00	G – 9
5JJ–82151–00	G – 10
5JJ–82151–10	G – 10
5JW–82151–10	G – 10

PART NO.	GRID NO.
5JJ–82151–70	G – 10
4C8–82171–00	G – 10
4C8–82309–00	G – 7
4C8–82310–00	G – 7
1C7–82380–00	G – 7
2C0–82380–00	C – 3
4C8–82386–00	C – 3
4C8–82501–10	G – 9
5SL–82511–08	G – 11
4BH–82511–09	G – 9
4C8–82530–00	G – 9
3GB–82540–01	G – 7
4C8–8255P–10	G – 10
13S–82566–50	G – 9
5PS–82576–01	G – 9
2C0–8258J–00	D – 7
4C8–82590–40	G – 9
4C8–82590–50	G – 10
1UA–82591–00	G – 10
3MA–82591–00	F – 2
4XV–82910–15	G – 6
4XV–82917–01	G – 6
2C0–83310–10	G – 2
306–83311–40	G – 2
2C0–83318–00	G – 2
2C0–83320–10	G – 2
2C0–83330–10	G – 2
2C0–8333A–10	G – 2
2C0–83340–10	G – 2
2C0–8334A–10	G – 2
4C8–83350–10	G – 9
4TH–83371–00	G – 9
4C8–83500–00	G – 3
4C8–83500–20	G – 3
4XV–83513–00	F – 8
5PW–8352S–00	G – 3
4C8–8353E–00	G – 3
5VY–83572–01	G – 3
4XV–83755–03	G – 7
4XV–83912–11	G – 6
5JJ–83913–00	G – 6
5SL–83922–10	F – 2
2C0–83945–00	G – 6
5LV–83951–00	G – 6
4C8–83973–00	G – 6
4C8–83975–00	G – 6
4HM–83980–00	F – 2
4C8–84196–00	G – 4

PART NO.	GRID NO.
4C8–84303–40	G – 4
4C8–84303–50	G – 4
4C8–84312–00	G – 4
4SV–84314–00	G – 4
4SV–84347–00	G – 4
4SV–84350–00	G – 4
4C8–84359–10	G – 4
4C8–84359–20	G – 4
4C8–84396–00	G – 4
5GJ–84397–00	G – 4
5SL–84397–00	G – 4
4C8–84710–10	G – 5
1A2–84714–41	G – 2
5PW–84717–00	G – 5
4HC–84744–00	G – 5
5VX–84745–01	G – 5
5MT–84751–00	G – 5
5SL–84753–00	D – 8
11H–85110–01	G – 8
5VY–85112–00	G – 8
5VY–85122–00	G – 8
3Y6–85130–02	G – 5
5VY–85720–00	G – 7
8CC–85790–01	G – 7
5VY–85820–10	G – 7
4C8–85829–01	G – 7
4C8–85850–00	B – 15
13S–85884–00	C – 3
13S–85885–00	C – 3
8FP–85886–00	F – 7
5VY–85896–00	G – 8
4C8–8591A–60	G – 9
4C8–8591A–A0	G – 10
4C8–8592A–00	C – 7
5VY–W0041–00	F – 2
5VX–W0042–60	F – 6
4C8–W0045–00	E – 11
5VX–W0046–00	E – 14
4C8–W0047–00	E – 11
5SL–W0047–00	E – 14
1J3–W0048–00	E – 11
1UY–W0048–00	E – 14
5VY–W0048–00	F – 2
4C8–W0057–00	E – 11
5VY–W0057–00	E – 14
5VY–W2470–00	E – 9
5SL–W2587–00	F – 2
4C8–W8250–A0	G – 10

PART NO.	GRID NO.
4C8–Y2410–00–03	E – 5
4C8–Y2808–70–P4	F – 11
4C8–Y2808–80–P1	F – 11
4C8–Y2808–90–P1	F – 11
4C8–Y2808–90–P3	F – 11
4C8–Y2809–70–P4	F – 12
4C8–Y2809–80–P1	F – 12
4C8–Y2809–90–P1	F – 12
4C8–Y2809–90–P3	F – 12
4C8–Y283U–70–P2	F – 10
4C8–Y283U–90–P0	F – 10
4C8–Y283U–A0–P3	F – 10
4C8–Y283U–B0–P5	F – 10
4C8–Y283V–70–P2	F – 10
4C8–Y283V–90–P0	F – 10
4C8–Y283V–A0–P3	F – 10
4C8–Y283V–B0–P5	F – 10
4C8–Y2881–10	F – 7
4C8–Y2881–20	F – 7
4C8–YK241–00–P0	E – 5
4C8–YK241–00–P1	E – 5
4C8–YK241–00–P3	E – 5
90101–08013	D – 13
90101–08662	F – 3
90105–05002	E – 6
90105–06027	B – 2
90105–06041	F – 2
90105–06065	B – 9
90105–06066	B – 9
90105–06078	F – 14
90105–07006	B – 8
90105–08063	C – 7
90105–08101	C – 9
90105–10017	D – 14
90105–10018	D – 15
90105–10021	D – 14
90105–10290	G – 7
90105–14002	E – 10
90109–06014	C – 11
90109–06015	C – 11
90109–06016	C – 10
90109–06031	C – 10
90109–06043	D – 8
	D – 9
90109–06056	F – 12
90109–06100	C – 9
90109–065G4	E – 2
90109–066F0	B – 2

PART NO.	GRID NO.
90109–080G5	G – 9
90109–083E0	F – 3
90109–085G6	F – 3
90109–10002	F – 3
90109–103A9	F – 3
90110–05014	E – 6
90110–05018	E – 15
90110–05030	E – 13
90110–05032	E – 15
90110–05112	E – 6
90110–06106	B – 8
90110–06110	C – 6
90110–06112	C – 10
90110–06161	B – 10
	B – 13
	C – 9
	G – 7
90110–06164	D – 2
90110–06167	B – 9
90110–06168	B – 11
90110–06173	B – 13
90110–06174	B – 10
90110–06175	B – 2
	G – 8
90110–06176	C – 13
90110–06181	E – 15
90110–06182	B – 13
	B – 14
	C – 11
	D – 4
90110–06212	B – 2
90110–06233	E – 6
90110–06255	C – 10
90110–06258	E – 9
90110–06276	C – 11
90110–06277	C – 11
90110–08068	C – 10
90110–10005	D – 6
90110–10011	D – 14
90111–05002	D – 8
	D – 14
90111–05007	D – 12
90111–05011	D – 11
90111–05026	F – 2
90111–06003	F – 3
90111–06019	D – 5
	D – 13
90111–06030	D – 9

PART NO.	GRID NO.
90111–06030	F – 12
90111–06038	C – 8
	F – 6
90111–06041	E – 2
90111–06043	D – 9
90111–06052	D – 10
90111–06064	F – 4
90111–08021	C – 7
90111–08038	F – 6
90111–08058	C – 7
90116–10023	C – 9
90116–10032	C – 9
90116–10485	E – 12
90119–05019	F – 6
90119–05193	D – 10
90119–05239	D – 10
90119–06052	F – 13
90119–06228	G – 10
90119–09003	C – 9
90149–06043	E – 11
90149–06064	C – 10
90149–06067	F – 14
90149–06105	F – 12
90149–06298	D – 13
90149–06302	D – 14
90149–08009	E – 14
90149–10039	D – 6
90149–10043	D – 6
90150–04041	G – 5
90153–06002	B – 10
90154–05012	E – 6
90154–05013	F – 8
90159–05011	G – 5
90159–05015	E – 7
90159–05035	B – 15
90159–06026	C – 14
90159–06150	F – 4
90160–05006	F – 8
	G – 3
90160–05007	F – 7
90167–05080	D – 7
90170–06228	D – 5
90170–28419	E – 2
90176–06014	B – 11
90176–06055	F – 9
90176–10075	B – 2
90179–05523	E – 6
90179–06M28	C – 6

PART NO.	GRID NO.
90179–08410	C – 6
90179–10414	B – 2
90179–10696	D – 6
90179–22019	D – 3
90179–30691	E – 2
90183–04039	G – 9
90183–05024	F – 5
90183–05074	E – 6
90183–05076	D – 9
	D – 12
	D – 13
	F – 5
	F – 7
90183–050A0	E – 2
90183–05M02	F – 10
90183–06069	D – 7
90183–060A2	C – 7
90185–10009	E – 12
90185–20008	D – 14
90185–24007	E – 13
90201–047A2	G – 9
90201–05021	F – 15
90201–06050	G – 5
90201–06071	B – 12
90201–06074	B – 12
90201–06079	B – 10
	C – 7
90201–06095	E – 5
90201–06431	C – 10
90201–06589	C – 13
90201–06M31	D – 6
90201–08034	C – 8
90201–08057	D – 13
90201–080E2	F – 3
90201–08103	F – 4
90201–081R9	F – 3
90201–08676	E – 15
90201–087G2	C – 7
90201–08M09	E – 15
90201–10021	E – 12
90201–10029	C – 15
90201–10039	G – 7
90201–10050	B – 2
90201–10054	C – 7
90201–101J1	F – 3
90201–12575	D – 5
90201–12790	G – 7
90201–146F9	F – 3

PART NO.	GRID NO.
90201–20016	C – 13
90201–20017	C – 13
90201–20026	D – 14
90201–22015	D – 3
90201–22019	D – 13
90201–25020	E – 13
90201–257H0	D – 3
90201–281U8	E – 2
90201–30016	D – 14
90202–05187	G – 10
90202–30235	E – 2
90208–25002	C – 14
90209–25011	D – 2
90209–28008	D – 2
90214–10002	F – 3
90214–25003	D – 2
90214–25004	D – 2
90214–28002	D – 3
90214–29002	D – 2
90240–08084	F – 3
90269–05001	E – 7
90269–06001	F – 9
90269–06008	F – 7
	F – 11
	G – 4
90269–06011	D – 12
90269–06012	D – 8
90269–06081	D – 7
	D – 10
	G – 5
90269–07007	F – 8
90269–07076	D – 9
	D – 12
90269–07077	D – 9
90282–03001	G – 7
90338–06007	C – 7
90338–06018	D – 9
	D – 12
90338–08008	D – 7
90338–08226	G – 7
90338–08236	D – 12
90338–14007	D – 7
90338–15004	D – 6
90338–23004	D – 6
90340–12003	C – 11
90340–14132	B – 14
90340–18002	B – 2
90340–32004	C – 11

PART NO.	GRID NO.
90387–05003	G – 5
90387–05017	D – 10
90387–05021	D – 9
90387–05025	G – 9
90387–053Y7	D – 7
90387–06023	F – 4
90387–0603J	F – 5
90387–06040	G – 10
90387–06055	E – 5
90387–06057	D – 14
	E – 2
90387–06066	D – 13
90387–06071	D – 10
90387–06112	B – 10
90387–06188	C – 7
90387–06194	E – 6
90387–061U9	E – 5
90387–062L2	C – 8
	E – 7
90387–062X0	D – 13
90387–063E6	D – 6
90387–064T3	F – 9
90387–065J6	D – 9
	F – 11
90387–06681	B – 12
	F – 13
90387–06697	F – 4
90387–066Y6	E – 5
90387–0700G	B – 11
90387–07717	D – 13
90387–08020	C – 8
90387–08021	C – 7
90387–0804S	D – 5
90387–1012A	D – 14
90387–1012B	D – 13
90387–1013U	D – 14
90387–1211D	D – 5
90387–25007	D – 2
90387–25008	D – 3
90387–28003	D – 2
90387–28004	D – 2
90387–31003	D – 2
90401–10012	E – 11
90401–10172	F – 2
	F – 6
90401–20145	B – 14
90413–08012	C – 3
90430–06014	B – 2

PART NO.	GRID NO.
90430–06014	B – 10
90430–06166	C – 9
90430–08143	C – 11
90430–10005	F – 2
	F – 6
90430–10148	G – 7
90445–08028	G – 7
90445–11418	E – 7
90445–19002	F – 3
90446–15386	F – 6
90450–22017	B – 12
90450–32001	B – 10
	B – 11
90450–35001	B – 11
90450–38040	B – 9
	B – 11
90450–62002	B – 15
90461–08002	C – 10
90461–08003	E – 6
90461–15139	E – 7
90462–08057	G – 7
90464–06214	E – 15
90464–09012	C – 4
90464–10008	D – 7
90464–11M24	B – 12
90464–13073	D – 10
	G – 10
90464–13077	F – 13
	G – 10
90464–15195	G – 4
	G – 10
90464–16005	C – 4
90464–16006	D – 7
90464–25160	F – 7
90464–28003	C – 5
90464–34002	D – 9
90464–47002	G – 4
90464–51001	G – 7
90465–04020	D – 10
90465–08053	G – 7
90465–08054	G – 8
90465–10098	G – 9
90467–08003	B – 12
90467–08021	G – 7
90467–08075	B – 12
90467–09006	C – 3
	E – 6
90467–10M04	B – 12

PART NO.	GRID NO.
90467–11044	B – 11
90467–11090	B – 11
90467–120A3	F – 2
	F – 6
90467–14015	B – 15
90467–140A5	B – 15
90467–17128	C – 5
90467–180A0	C – 5
90467–18172	C – 5
90467–200A0	B – 10
	B – 11
90480–01333	D – 7
90480–08264	B – 15
90480–10542	E – 5
90480–11009	G – 5
90480–12005	D – 14
90480–12010	B – 10
90480–12021	C – 7
90480–12072	D – 9
90480–12314	E – 6
90480–12596	F – 11
90480–12607	F – 4
90480–13010	B – 13
90480–13014	C – 11
90480–13018	E – 7
90480–14005	D – 6
90480–15363	B – 11
90501–064L1	D – 4
90501–12743	F – 4
90501–240A0	C – 14
90506–18008	F – 3
90506–20193	F – 6
90508–16041	C – 15
90508–18135	F – 3
90508–32020	D – 5
90560–05N33	D – 11
90560–06244	D – 13
	E – 2
91312–04025	G – 9
91312–05012	G – 4
91312–06016	C – 2
	E – 5
91312–06025	B – 14
	E – 15
91312–06040	B – 9
91312–06090	E – 5
91312–08020	F – 4
91312–08030	E – 15

PART NO.	GRID NO.
91314–06035	F – 4
91314–08030	E – 2
	E – 4
91314–08040	E – 3
91317–05010	E – 6
91317–06012	F – 3
91317–06025	E – 15
91317–06030	B – 12
91380–06014	C – 12
91401–25015	F – 4
91402–16012	F – 6
91702–06018	F – 6
91808–16023	B – 2
91808–30031	B – 9
92012–06010	E – 7
92012–06012	F – 5
92012–06014	B – 12
92012–06016	D – 13
	E – 7
92014–06012	C – 6
92014–06014	C – 10
92014–08016	C – 11
92017–05012	D – 11
92017–05035	G – 9
92017–06016	E – 7
92017–06025	E – 9
92902–05600	B – 15
92902–06200	F – 6
92907–05200	G – 5
92907–08600	C – 14
92990–06200	C – 6
93102–12106	D – 5
93102–12372	B – 9
93102–15212	C – 14
93102–40330	D – 3
93106–28043	E – 10
93106–40013	E – 12
93109–17071	D – 13
	D – 15
93210–04092	C – 9
93210–06667	B – 9
	B – 13
93210–09165	B – 13
93210–14003	B – 13
	C – 9
93210–15566	B – 14
93210–16325	C – 11
93210–18397	C – 13

PART NO.	GRID NO.
93210–22298	B – 13
93210–22382	C – 10
93210–235A1	B – 10
	B – 11
93210–25711	F – 15
93210–27194	C – 10
93210–27370	B – 10
93210–32172	C – 11
93210–357A2	B – 9
93210–47675	B – 9
93210–49046	B – 11
93210–57003	C – 11
93305–20605	D – 2
93306–00106	B – 9
	D – 4
93306–00304	C – 14
93306–07208	E – 10
93306–20124	C – 10
93306–20230	C – 13
93306–20531	E – 12
93306–205A2	D – 3
93306–20652	D – 2
93306–27208	D – 2
93310–232R9	C – 15
93315–21570	C – 14
93315–31758	D – 13
	D – 15
93317–11096	C – 14
93317–11295	D – 5
93317–428U8	D – 13
93317–43580	E – 12
93317–52865	D – 13
93399–99932	E – 2
93399–99957	E – 2
93420–61M07	E – 12
93440–28184	D – 2
93440–31187	D – 2
93440–52009	D – 3
93440–62032	D – 3
93450–18157	B – 5
93501–04011	F – 4
93603–12007	B – 9
93603–17070	B – 9
93605–10108	C – 10
93607–44002	B – 8
93610–20189	C – 10
93900–00030	E – 10
	E – 12

PART NO.	GRID NO.
94112–17097	E – 10
94112–17098	E – 10
94119–17065	E – 12
94119–17066	E – 12
94580–25078	B – 13
94582–10118	E – 13
94591–60124	B – 8
94682–05031	E – 13
94701–00403	B – 2
95022–06016	G – 7
95022–06020	D – 5
	D – 6
	E – 5
95022–06030	E – 5
95022–06040	F – 15
95024–06012	B – 2
	D – 6
95024–06025	B – 9
95024–10050	D – 6
95027–06008	G – 9
95027–06020	G – 6
95302–06700	F – 15
95302–08600	D – 13
95304–06700	D – 5
95307–08700	F – 6
95602–05100	G – 5
95602–08200	E – 15
95602–10200	D – 14
	D – 15
95602–14200	D – 15
95604–06200	F – 4
95604–08200	C – 8
95607–04100	G – 5
95607–05200	G – 5
	G – 9
95607–06100	G – 5
95607–06200	B – 12
	G – 6
95607–08200	F – 8
95607–10200	F – 3
95612–08625	B – 2
95707–05500	G – 5
	G – 8
95707–06500	D – 9
95802–06025	G – 10
95807–06012	G – 9
95807–08030	E – 15
95812–06050	C – 9

PART NO.	GRID NO.
95812–06060	C – 9
95812–06070	C – 9
95812–08040	C – 7
95812–08050	C – 9
95812–08060	C – 9
95814–08030	C – 6
95814–08045	C – 8
95822–06016	D – 7
95827–06030	B – 12
97702–40010	G – 2
97702–50014	D – 10
97702–50016	F – 10
	G – 4
97702–50520	G – 7
97702–60520	G – 7
97706–04012	G – 5
97707–50016	G – 5
97707–50020	G – 5
97707–50116	F – 7
98502–05035	B – 15
98502–06012	C – 3
98507–04010	G – 6
98507–05022	G – 6
98507–05025	G – 6
98707–03016	G – 6
98902–05020	B – 15
98907–05014	E – 6
99001–07600	C – 14
99002–10600	D – 5
99009–10400	C – 15
99480–10018	C – 10
99530–08012	B – 14
99530–10014	C – 9
99530–10114	B – 3
	B – 4

PART NO.	GRID NO.